ATLAS Phase-2 Trigger

Elliot Lipeles
University of Pennsylvania

CPAD
UT Arlington, Oct 2015

LHC Program and ATLAS Upgrades

Run-2 (Phase-0) Upgrades
- New inner pixel layer
- New "topological" trigger

Phase-1 Upgrades
- Additional forward muon trigger detectors
- Increased calorimeter trigger granularity

Phase-2 Upgrades
- **New trigger strategy**
- Most electronics replaced
- New inner tracker
- New FCAL(?)
- New Endcap Preshower(?)

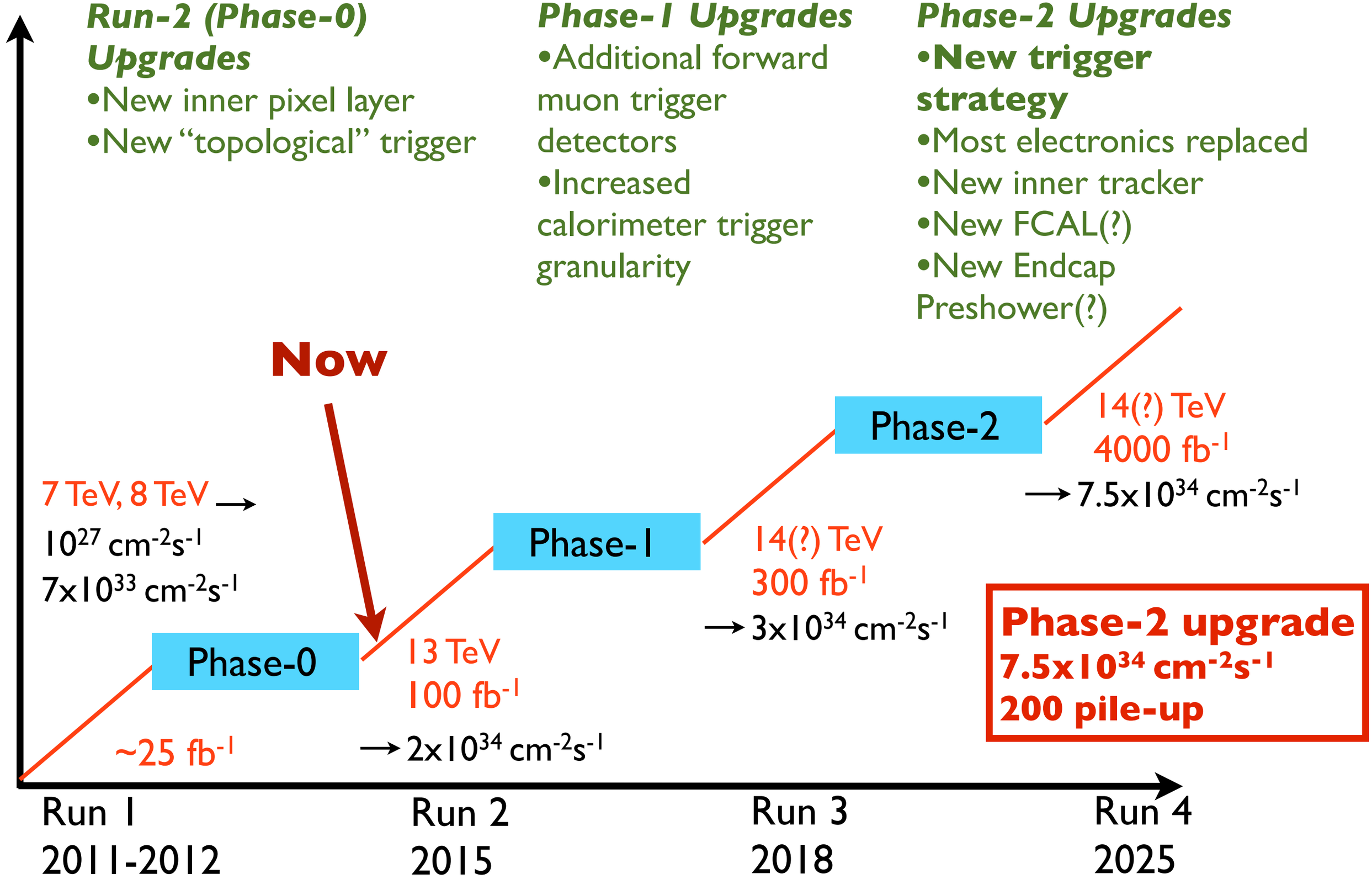

Introduction

ATLAS Trigger Plans for Phase-2

- Physics requirements: Higgs, BSM and the unknown
  - Single Leptons
  - All other triggers
- Overview of current ATLAS trigger
- ATLAS phase-1 upgrades
- Phase-1 limitations
- Phase-2 detector readout plans
  - = constraints we must live within
- Phase-2 plans
- Phase-2 expected performance

Single Lepton Motivation

The peak of the lepton energy from W and Z is around 35 GeV, so a cut at ~35 GeV gives a less than 50% acceptance

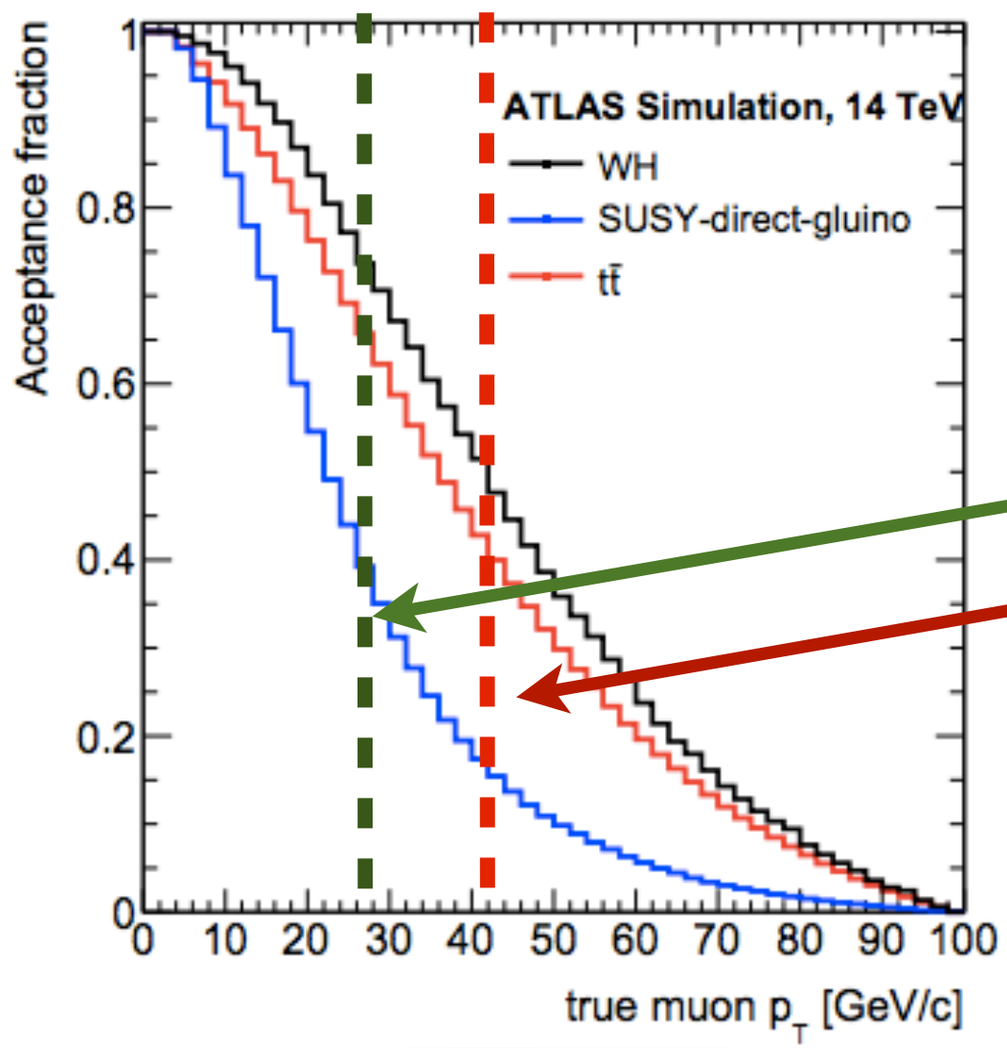

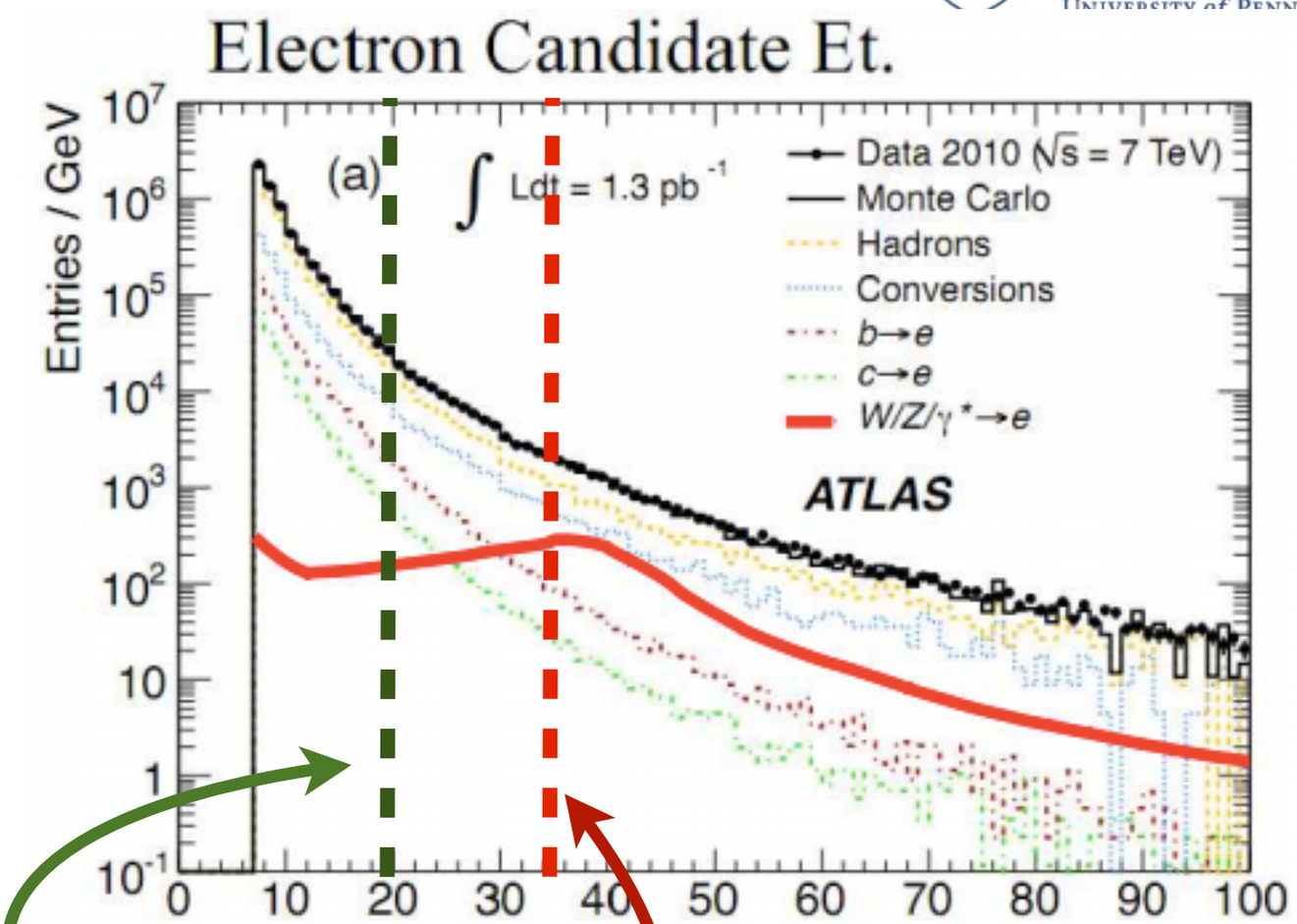

Would rather be **here** than **here**

Acceptance increase from lowering threshold from 30 GeV to 20 GeV is 1.3-1.8 for WH, tt, and a SUSY model

Need to maintain sensitivity/ flexibility for unknown physics

Other reasons all thresholds remain low

Higgs program

Conceptually: Higgs physics remains at low electroweak scale

HL-LHC is about precision and rare processes (e.g. HH)

$H \to WW^* \to ll\nu\nu$:
give shigh+low p_T lepton
$\Rightarrow$ Single lepton trigger

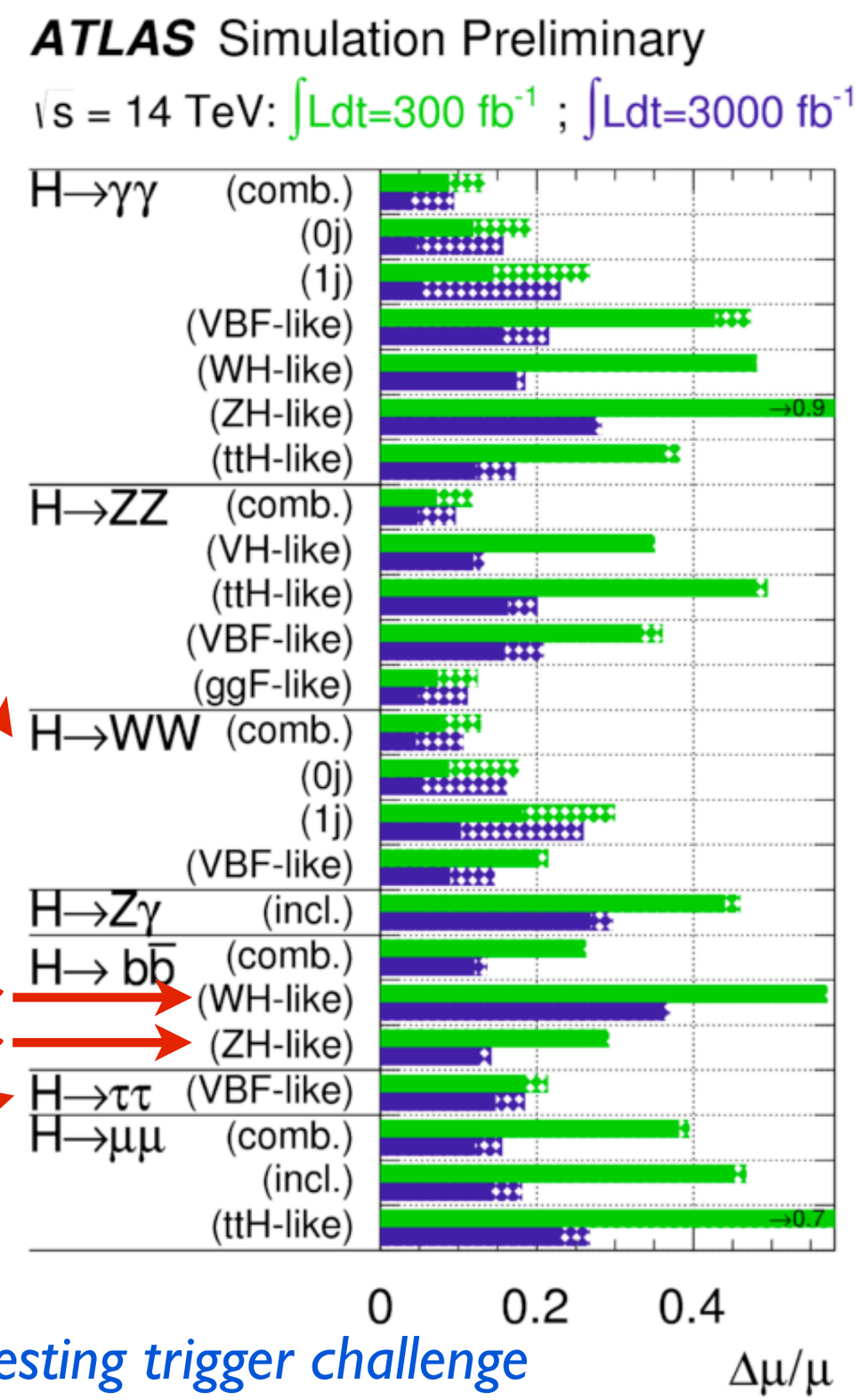

Single lepton trigger
MET trigger
di-tau trigger

HH = complicated

γγbb easy trigger
- di-photon

ττbb hard trigger
- di-tau, maybe + jet

bbbb very hard trigger
- 4 jet

VBF $H \to bb$ also interesting trigger challenge

Other reasons all thresholds remain low

BSM program

Conceptually: Strongly coupled physics at high masses will already be strongly constrained. Weakly coupled physics even at lower energies will still be open...

E.g. Charginos = One of the compelling physics cases for HL-LHC

Trigger Challenge

This region just below the kinematic boundary has low p_T leptons
May also be the most "Natural"

Also still a lot of thinking going on about how to address these kinematic boundaries

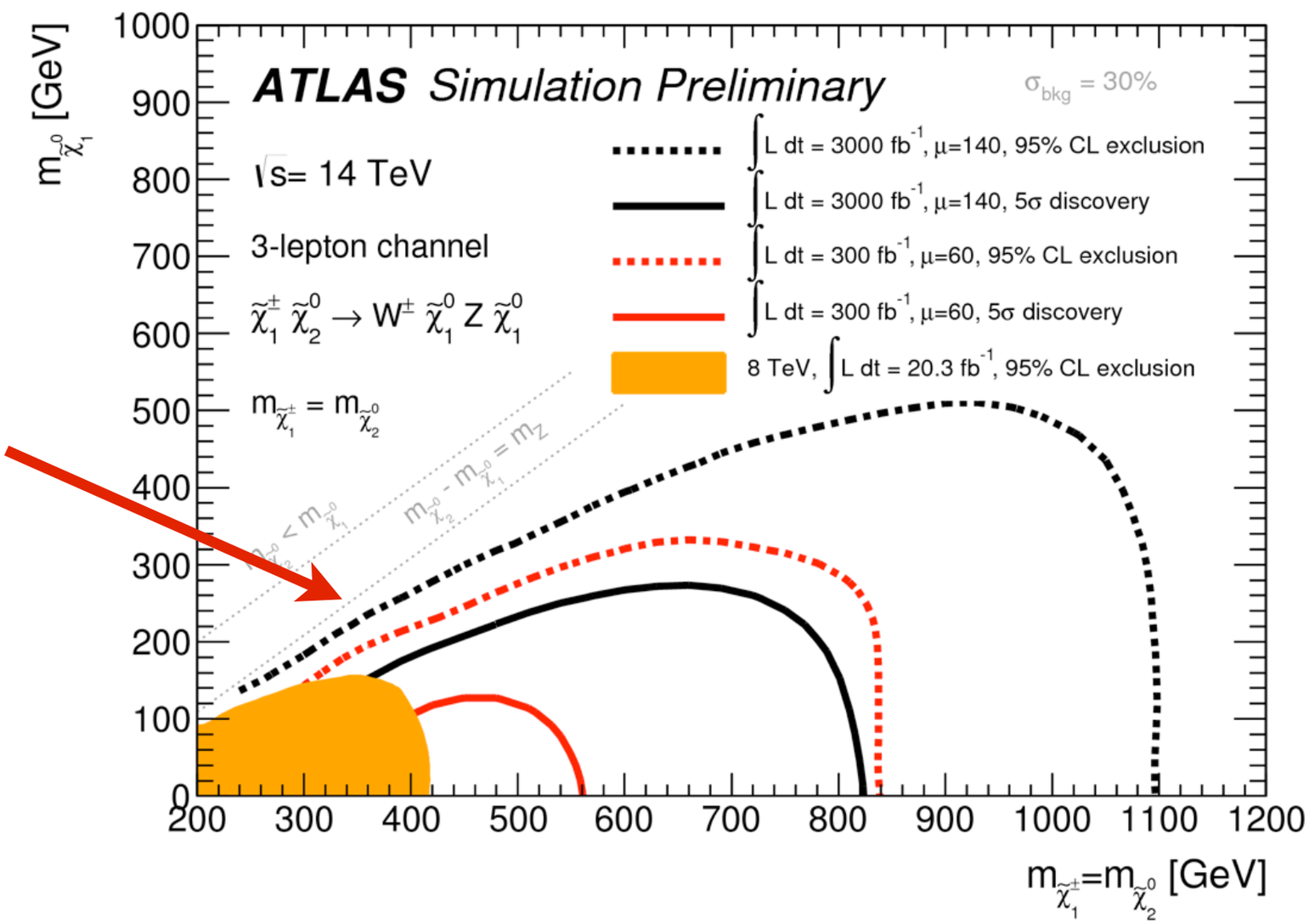

Start with the Run-2 Trigger+DAQ

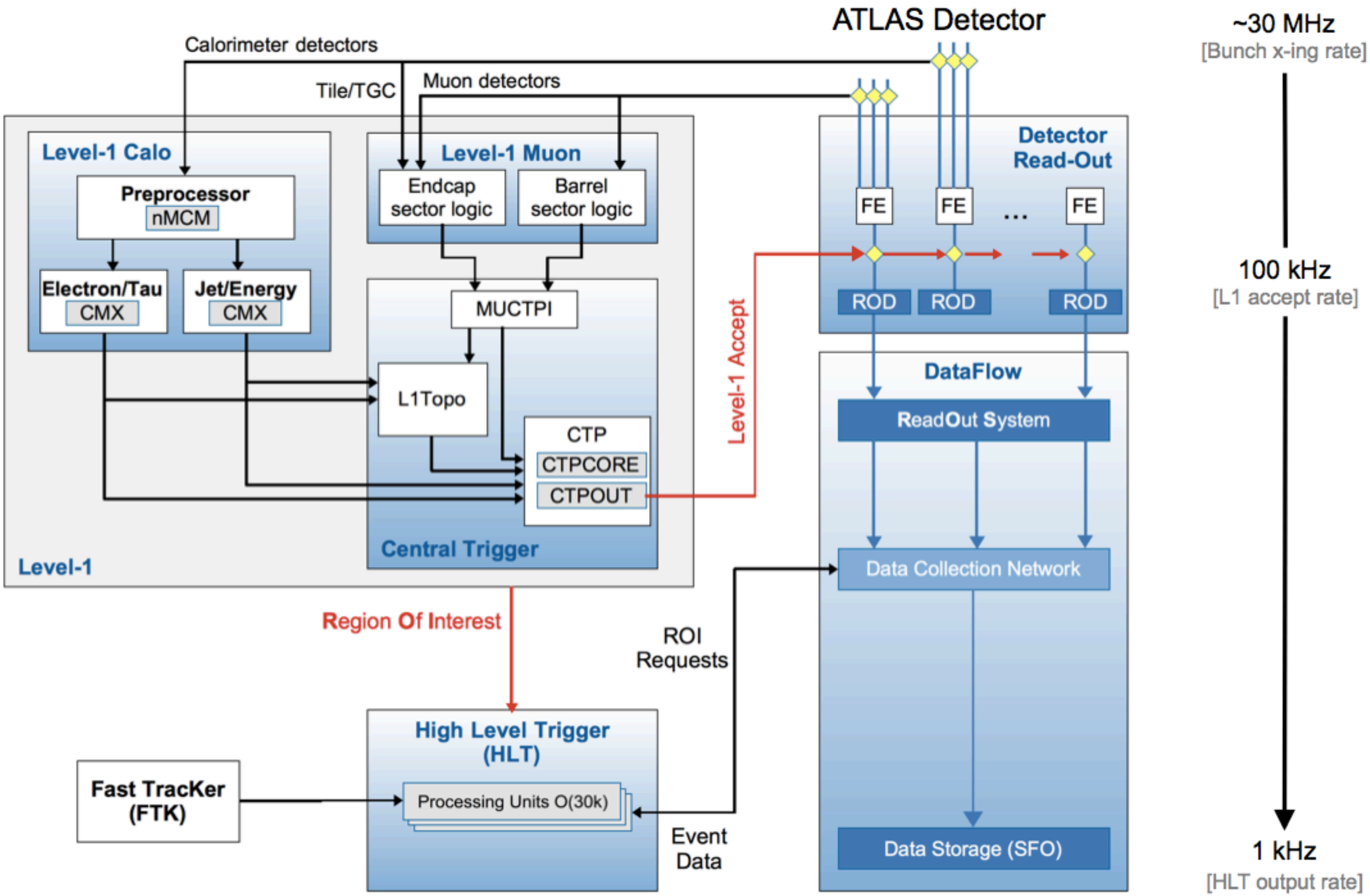

Start with the Run-2 Trigger+DAQ

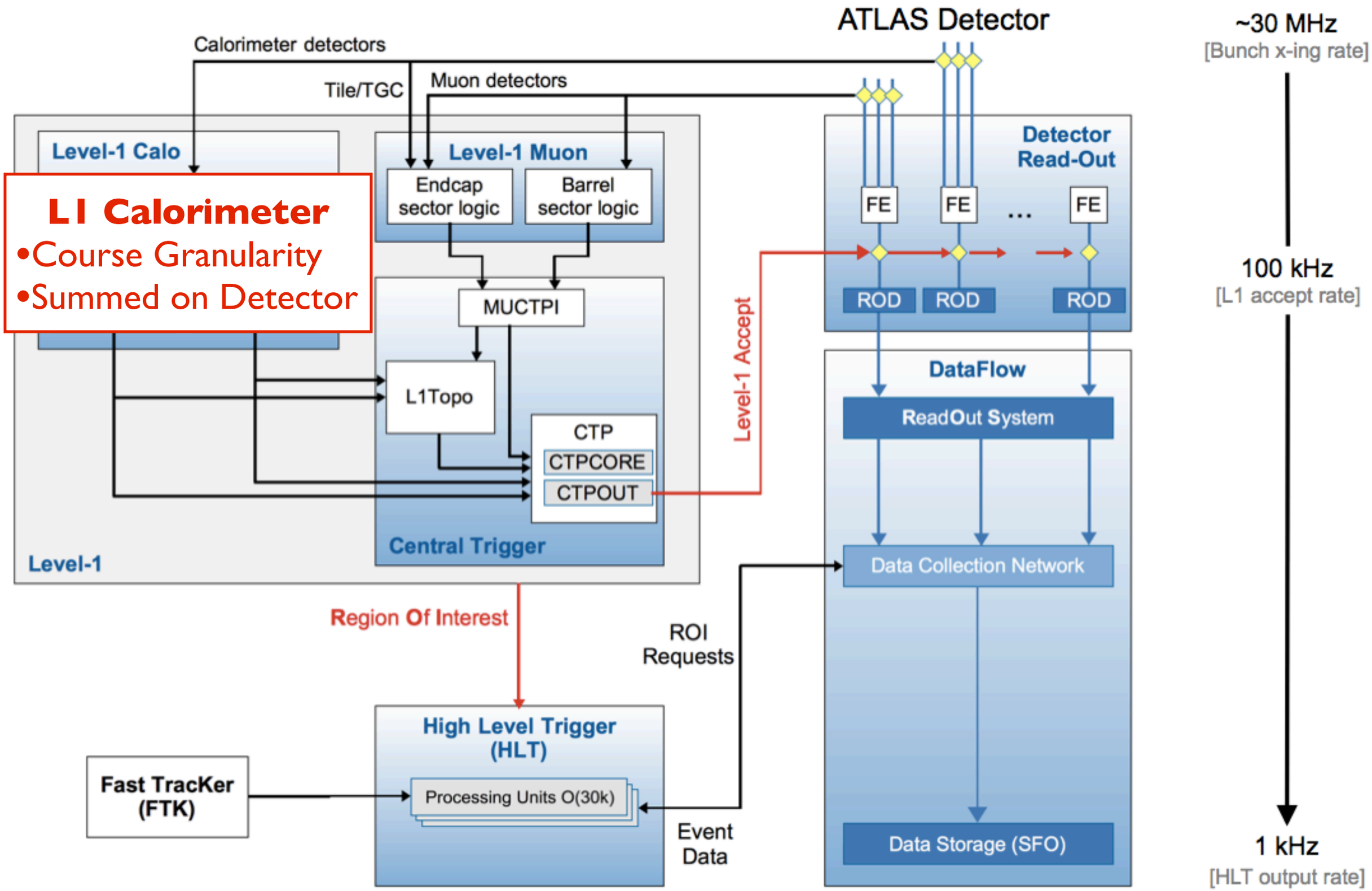

Start with the Run-2 Trigger+DAQ

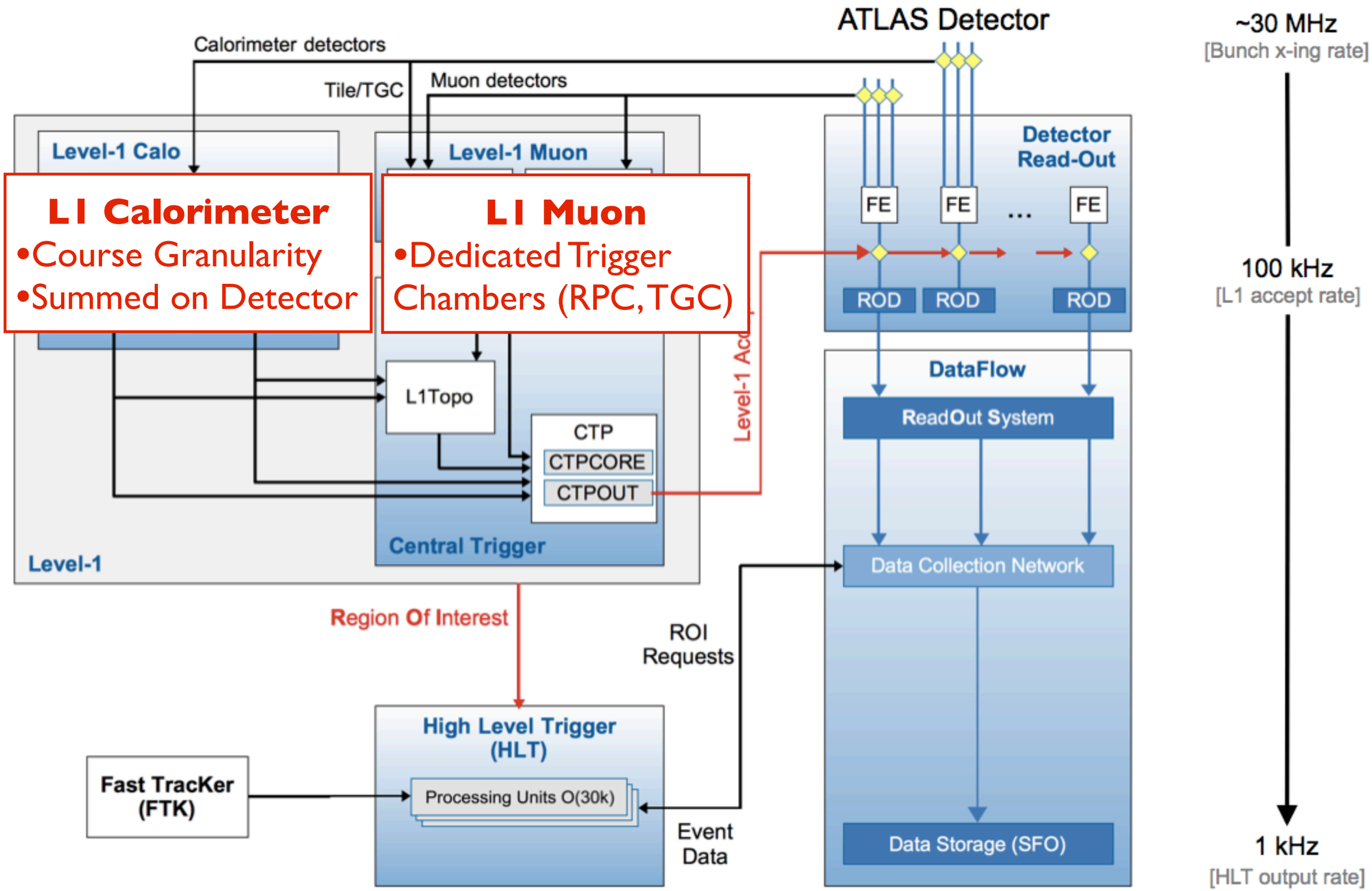

Start with the Run-2 Trigger+DAQ

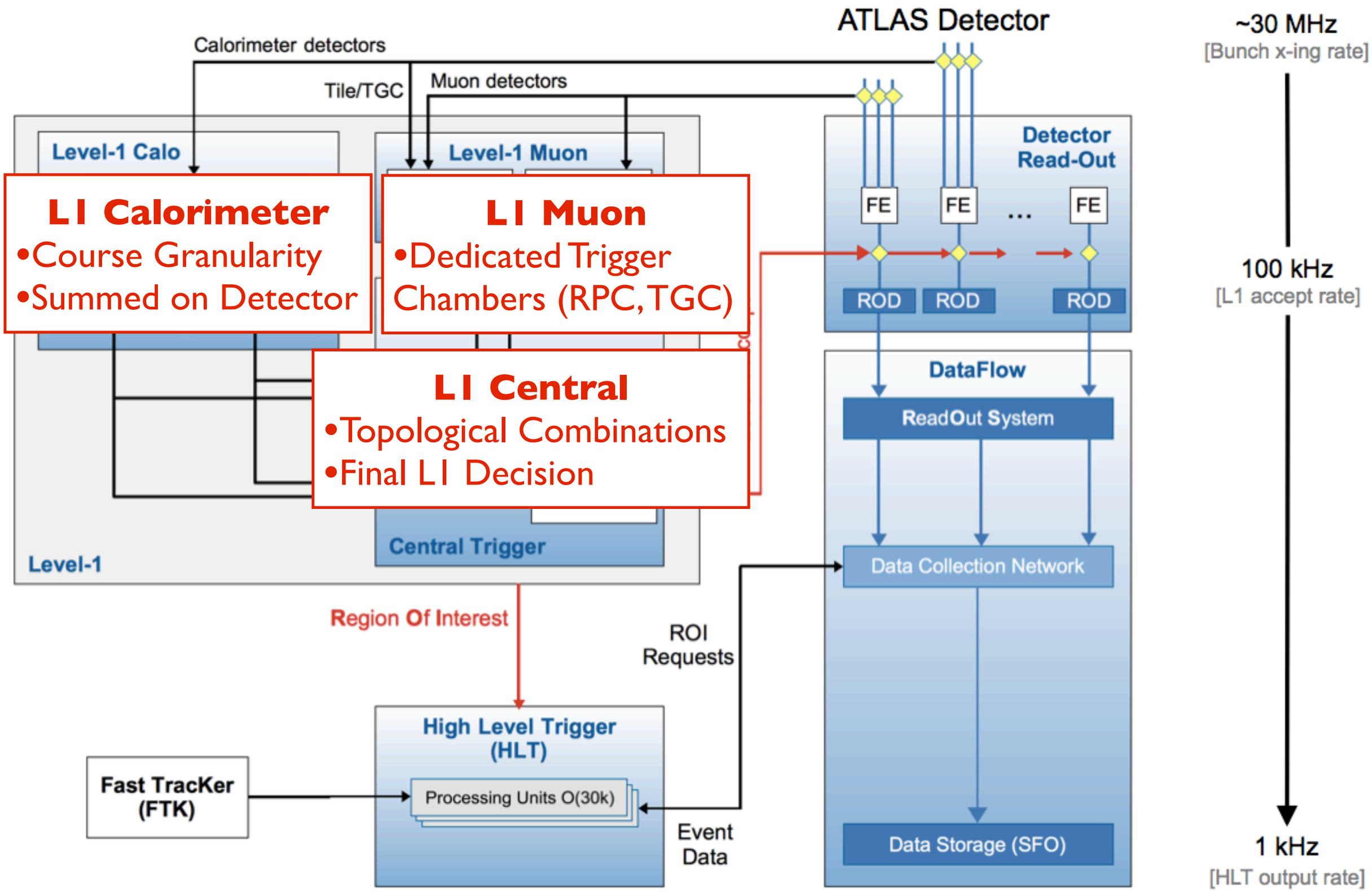

Start with the Run-2 Trigger+DAQ

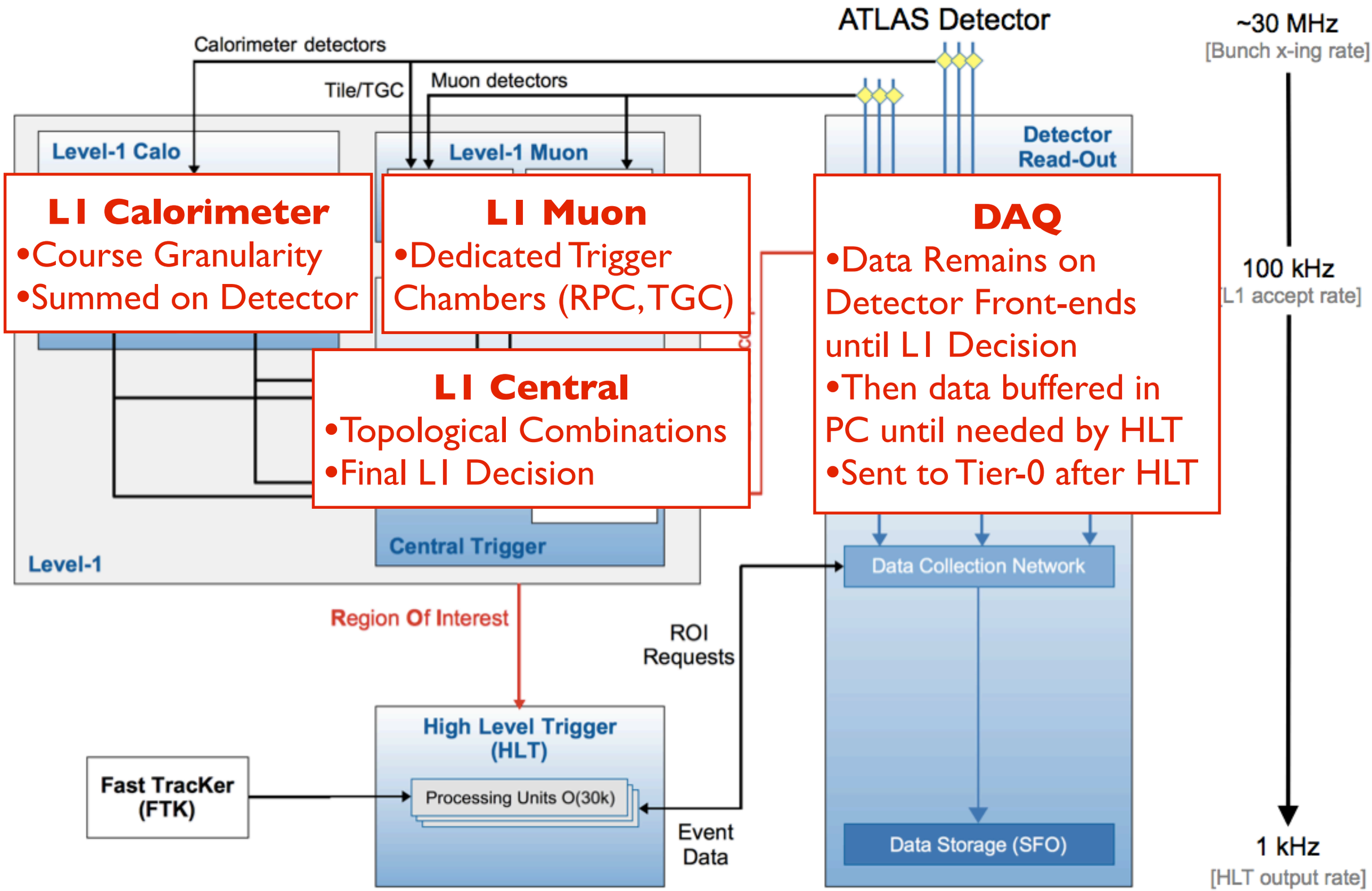

Start with the Run-2 Trigger+DAQ

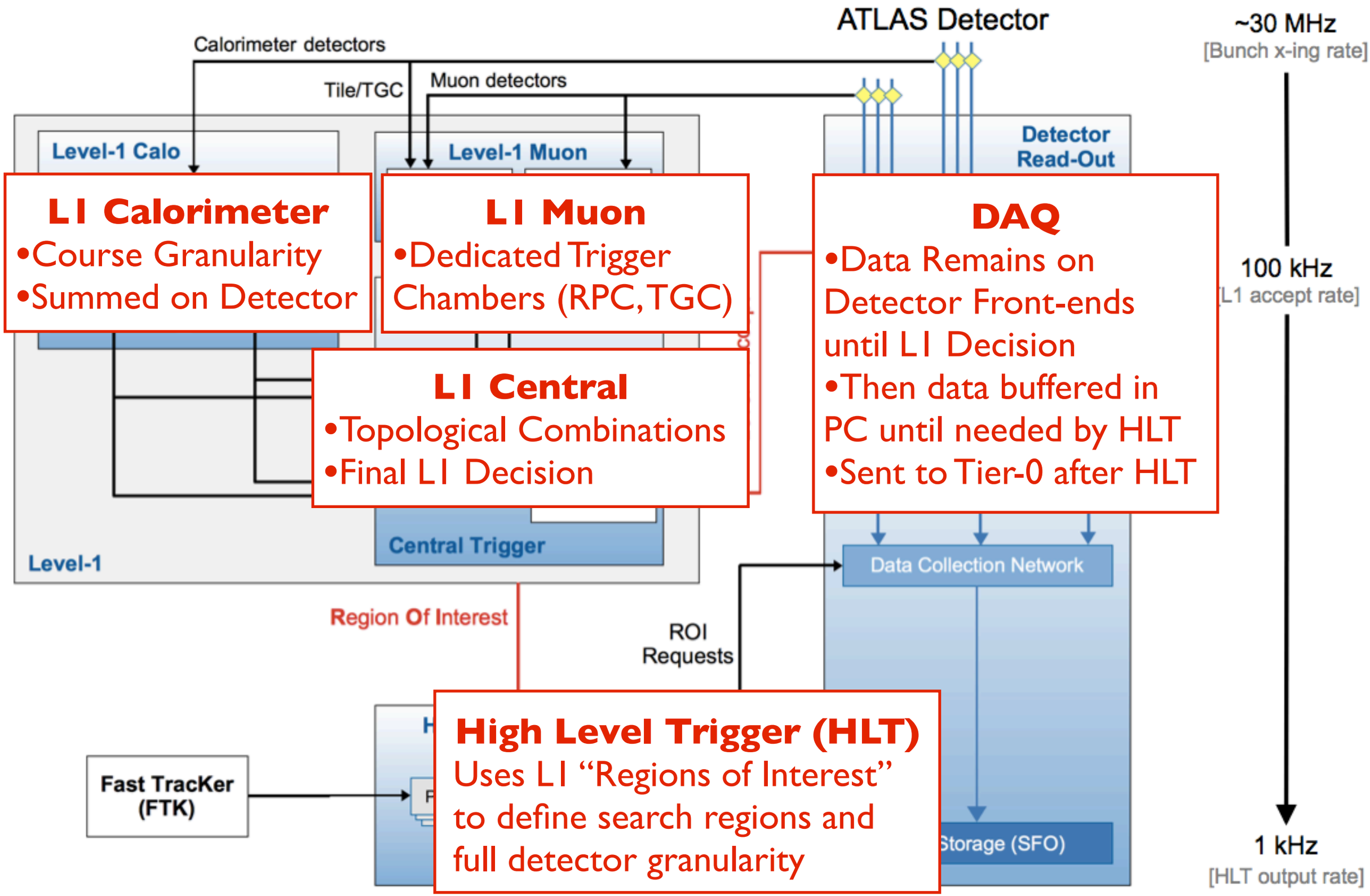

Start with the Run-2 Trigger+DAQ

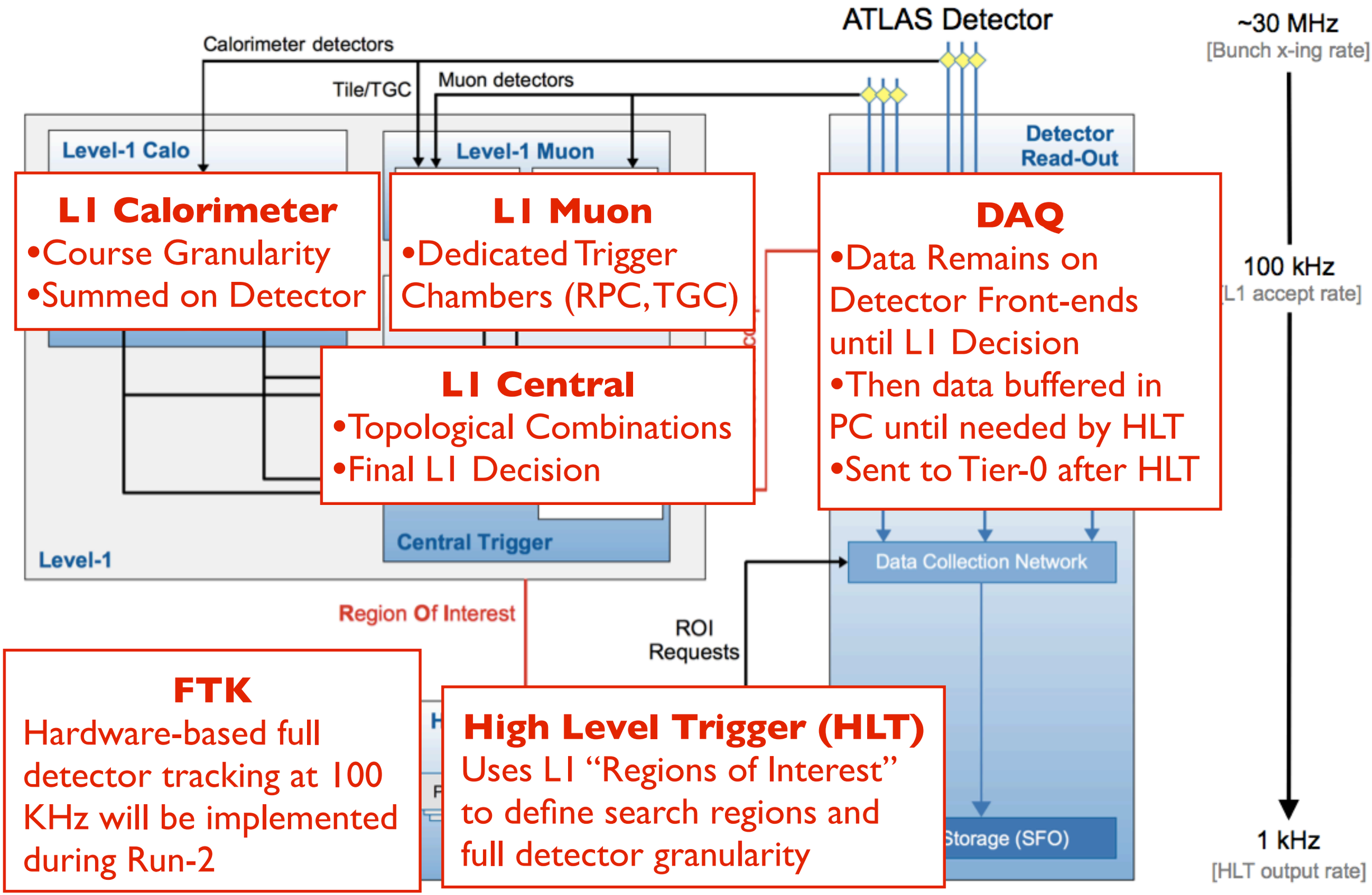

L1 Calorimeter
- Course Granularity
- Summed on Detector

L1 Muon
- Dedicated Trigger Chambers (RPC, TGC)

L1 Central
- Topological Combinations
- Final L1 Decision

DAQ
- Data Remains on Detector Front-ends until L1 Decision
- Then data buffered in PC until needed by HLT
- Sent to Tier-0 after HLT

FTK
Hardware-based full detector tracking at 100 KHz will be implemented during Run-2

High Level Trigger (HLT)
Uses L1 "Regions of Interest" to define search regions and full detector granularity

Calorimeter trigger vertical view

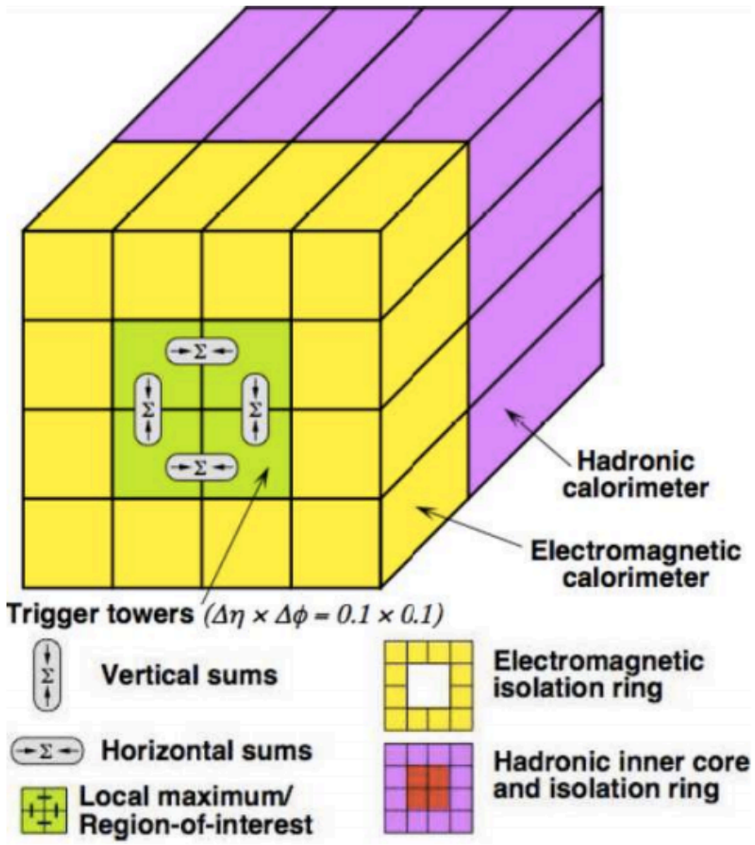

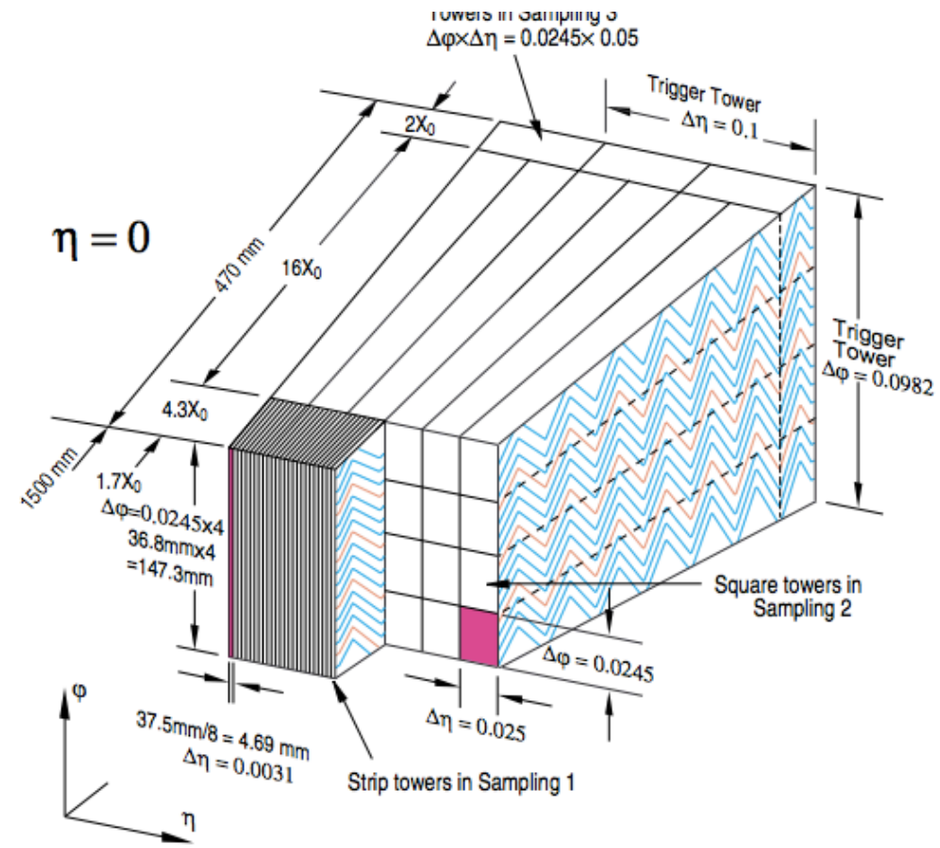

L1 Trigger: analog sums over...

- Sliding Window algorithms in FPGAs
- 0.1x0.1 for e, γ, and τ
  - Isolation is possible
- ~0.2x~0.2 for jets, MET, sumET

General upgrade trend is to push HLT algorithms to L1

HLT Trigger:

- Use full detector granularity
- Same digitization as offline
- Track-shower matching
- Detailed shower shape cuts
- Reclustering jets
- Sharper turn-on curves
- Lower rates

Muon trigger vertical view

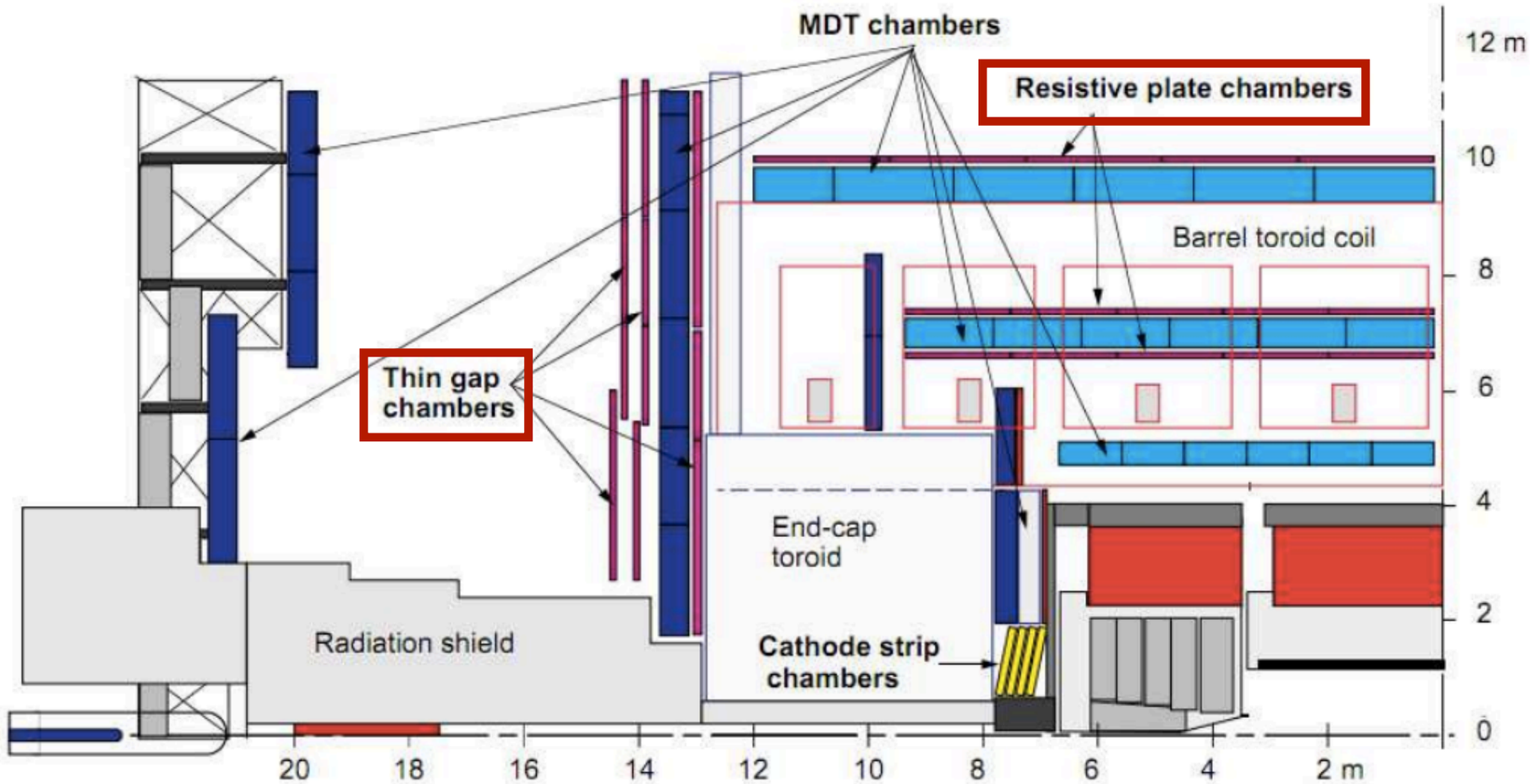

L1 Trigger:

- Fast Resistive Plate (RPC) and Thin Gap Chambers (TGC)
- Hardware (FPGA) pattern recognition

HLT Trigger:

- Use slower more precise MDT chambers
- Combine with inner detector track
- First simplified B-field model
- Then full offline software

Trend: Move HLT to L1, but also add more trigger chambers

Lepton Trigger Rates

Why Phase-1 Upgrades are needed...

Scale Run 2 rates to Phase-1 Luminosity:

	2012 Menu at Phase-1 Luminosity	
Trigger	Offline Usable Threshold	L1 Rate
Single Electron	25	130 KHz
Single Muon	25	150 KHz

The 2012 Menu is a good benchmark because it is proven to support a broad program

Rates for $3 \times 10^{34} cm^{-2} s^{-1}$ (from ATLAS Phase-1 TDR)
https://cds.cern.ch/record/1602235

We'd like to keep these thresholds, but the rates are clearly too high to sum to 100 KHz total!

⇒ Build a Phase-1 upgrade

Phase-1 L1Calo Trigger Upgrade

Granularity Improvement

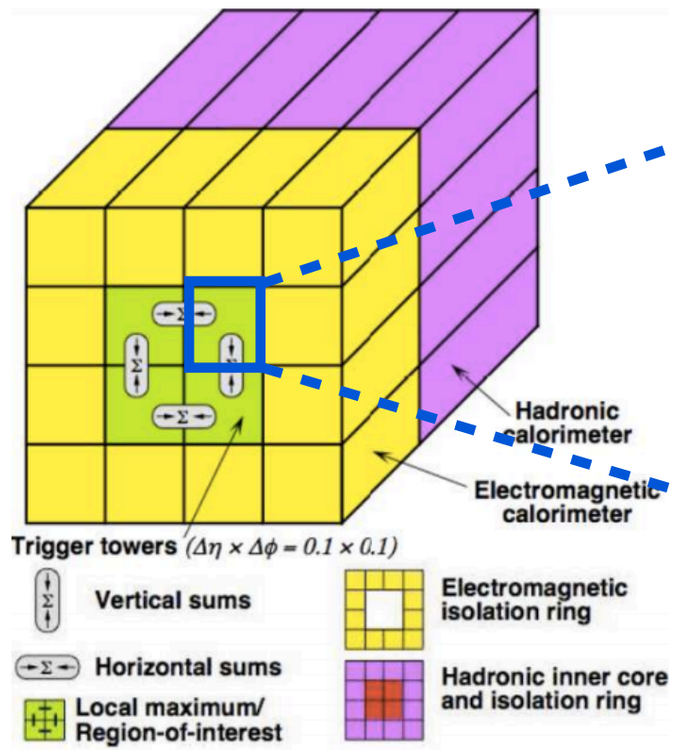

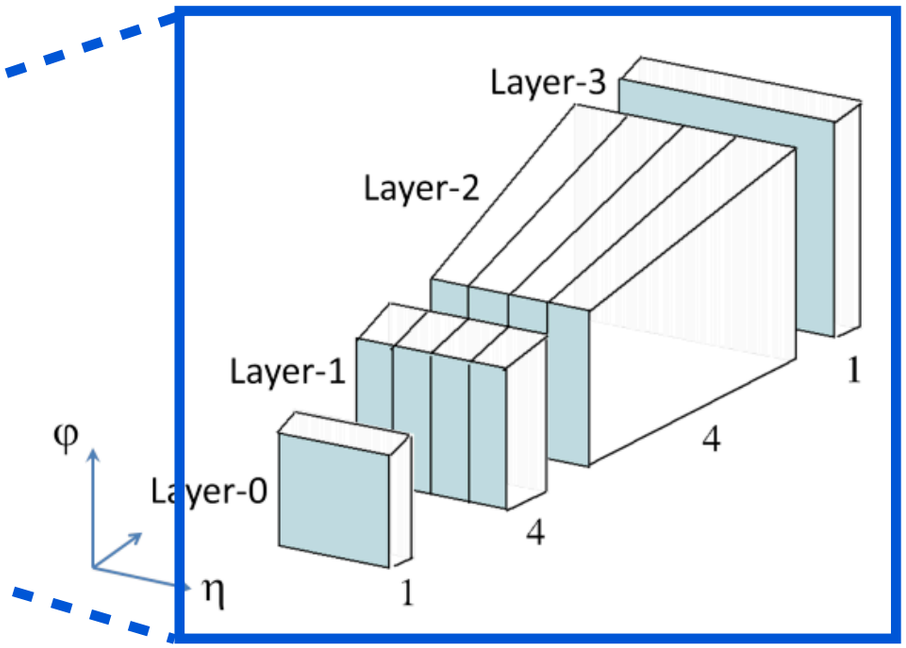

Cut on shower shapes

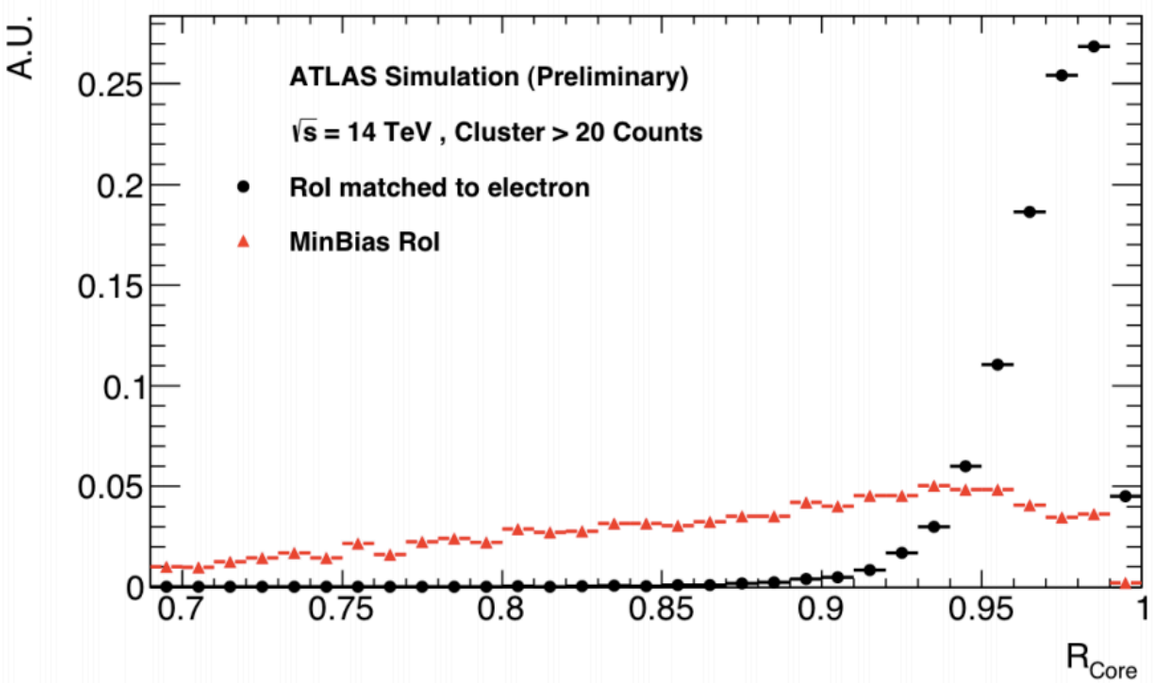

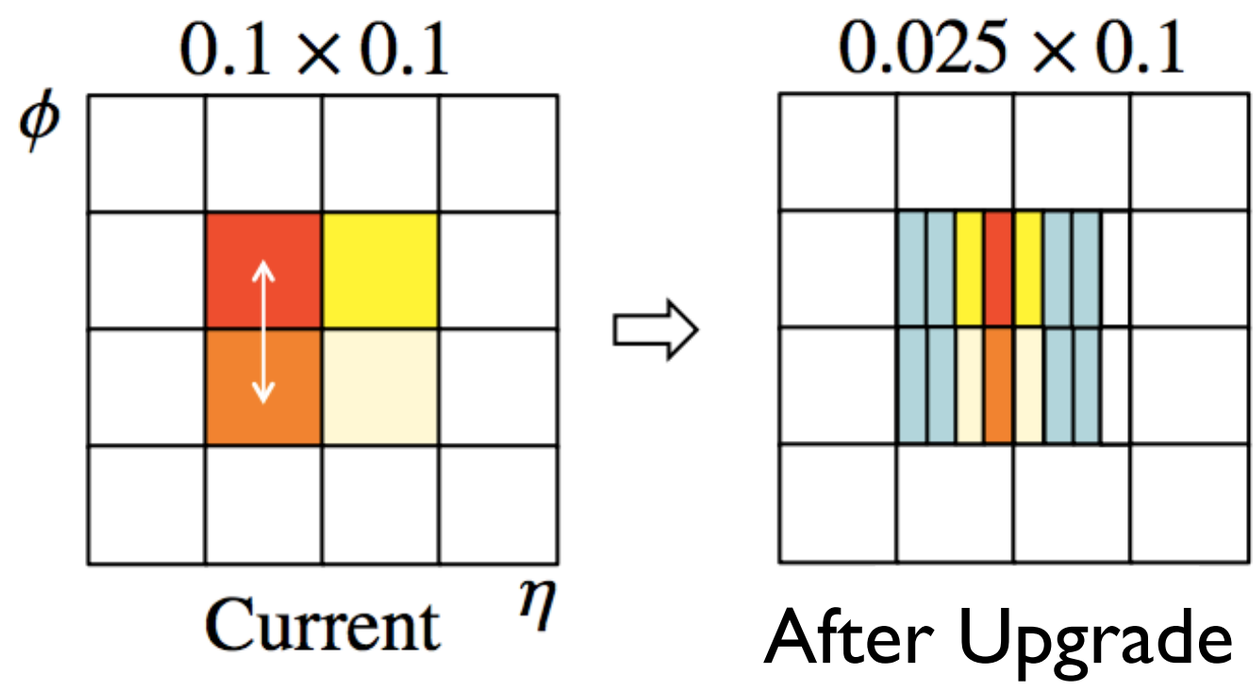

Analog summing and digitization is done on detector

Phase-1 Muon Trigger Upgrade

Add new forward chambers
New Small Wheel = TGC + Micromegas

Trigger Rates driven by

- Resolutions (muons below the nominal threshold)
- Fakes (charged particles not associated with the collision)

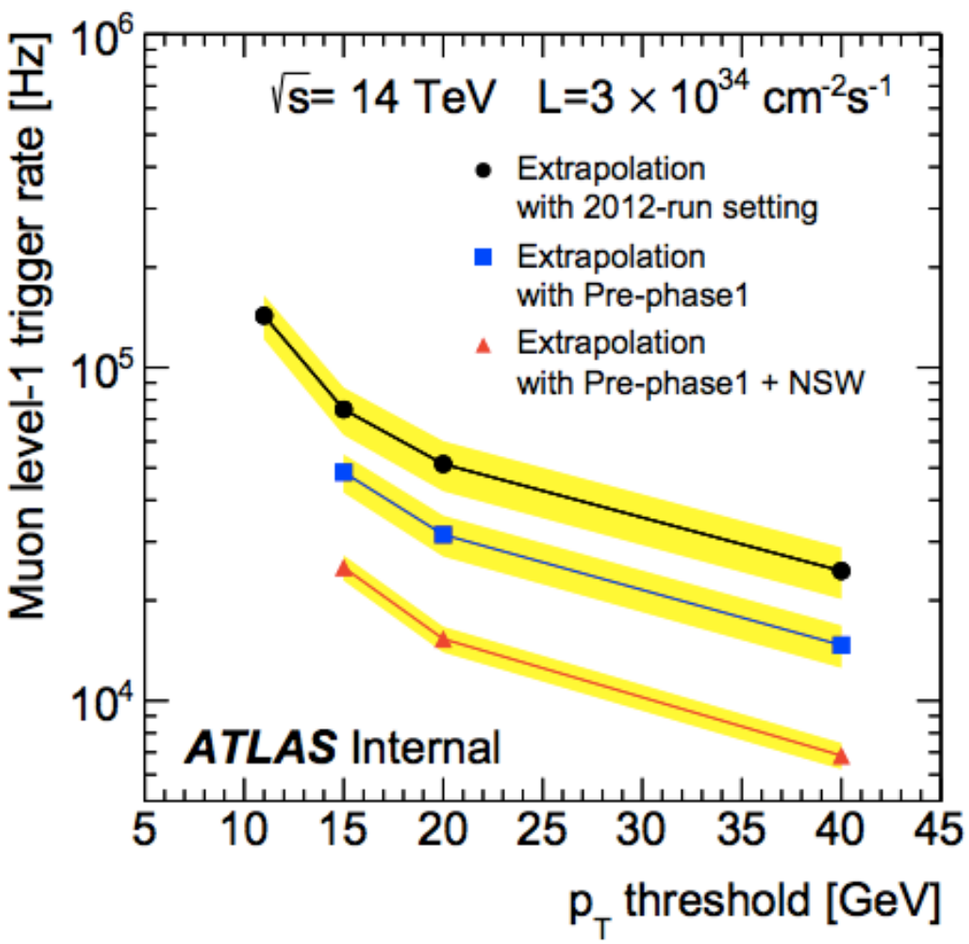

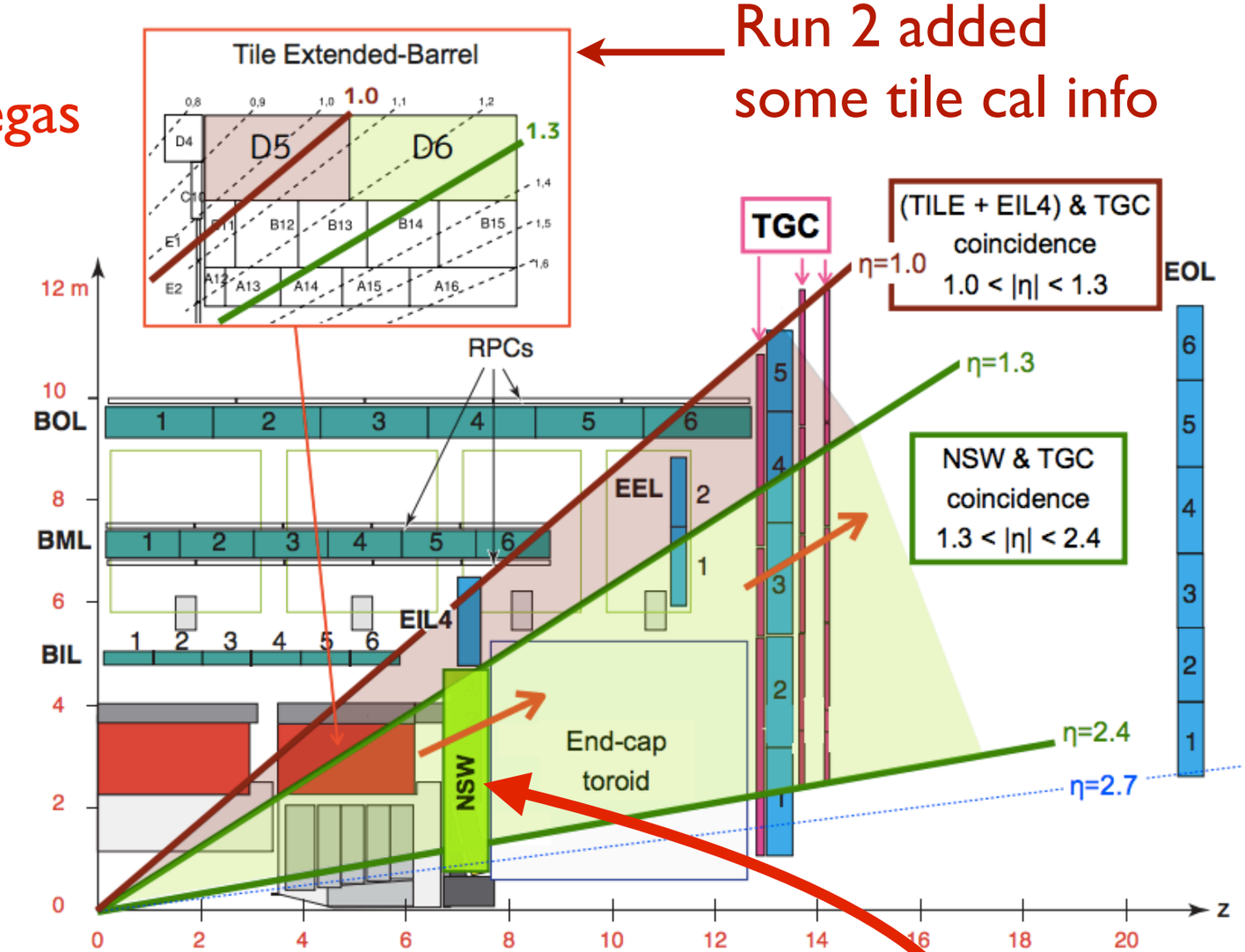

Rates at 3x10^{34} cm^{-2}s^{-1}
51 KHz for 2012 Configuration
32 KHz for 2015 Configuration
15 KHz with "New Small Wheel"

Lepton Trigger Rates

Phase-1 Upgrade Expected Performance:

	2012 Menu+Hardware at Phase-1 Luminosity		Phase-1 2018 Menu+Hardware at Phase-1 Luminosity	
Trigger	Offline Usable Threshold	L1 Rate	Offline Usable Threshold	L1 Rate
Single Electron	25	130 KHz	32	14 KHz
Single Muon	25	150 KHz	25	15 KHz

Rates for $3 \times 10^{34} cm^{-2} s^{-1}$ (from ATLAS Phase-1 TDR)

Note: Single electron threshold is a bit high

Now single lepton trigger fits in 100 KHz

Additional new trigger features for "Fat"-jets (=merged jets) and forward jet triggering

Lepton Trigger Rates

Phase-1 system at Phase-2 luminosity

	Phase-1 System at Phase-2 Luminosity	
Trigger	Offline Usable Threshold	L1 Rate
Single Electron	32	35 KHz
Single Muon	25	38 KHz

My own simple extrapolation

These won't really fit in a 100 KHz menu

Plus all the other rates are also increasing substantially

Single electron threshold is a bit high in Phase-1

- We'd like to go back to ~25 GeV thresholds
- This would make the L1 single electron rate alone more like ~200 KHz!

Muon Trigger Efficiency Issue

The TGC and RPC coverage has a lot of holes in it

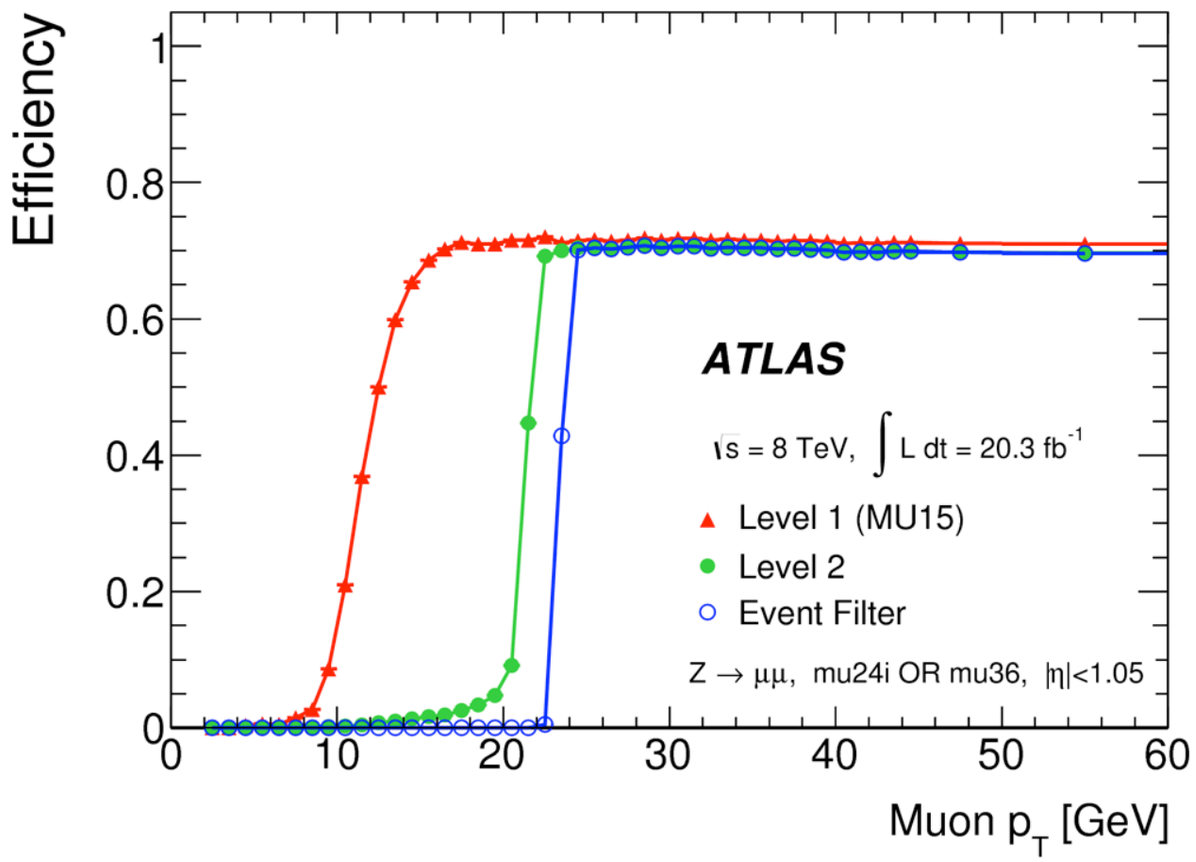

Barrel Efficiency ~70%

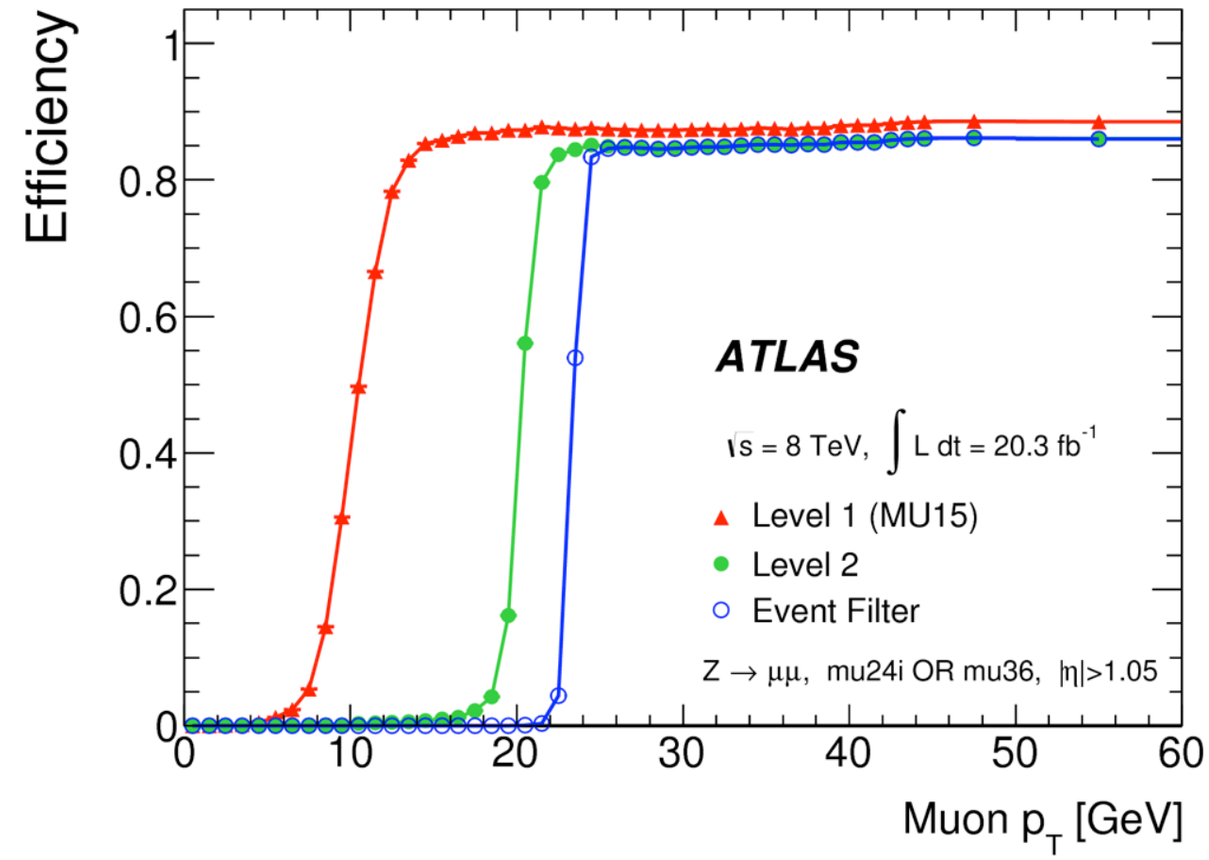

Endcap Efficiency ~90%

Really hurts for dimuon triggers (lose as the square)

Even worse for high luminosity must reduce RPC voltage to prevent aging (efficiency → 65%)

Overview of Phase-2 Upgrade

Phase-2 = Opportunity to change trigger strategy!

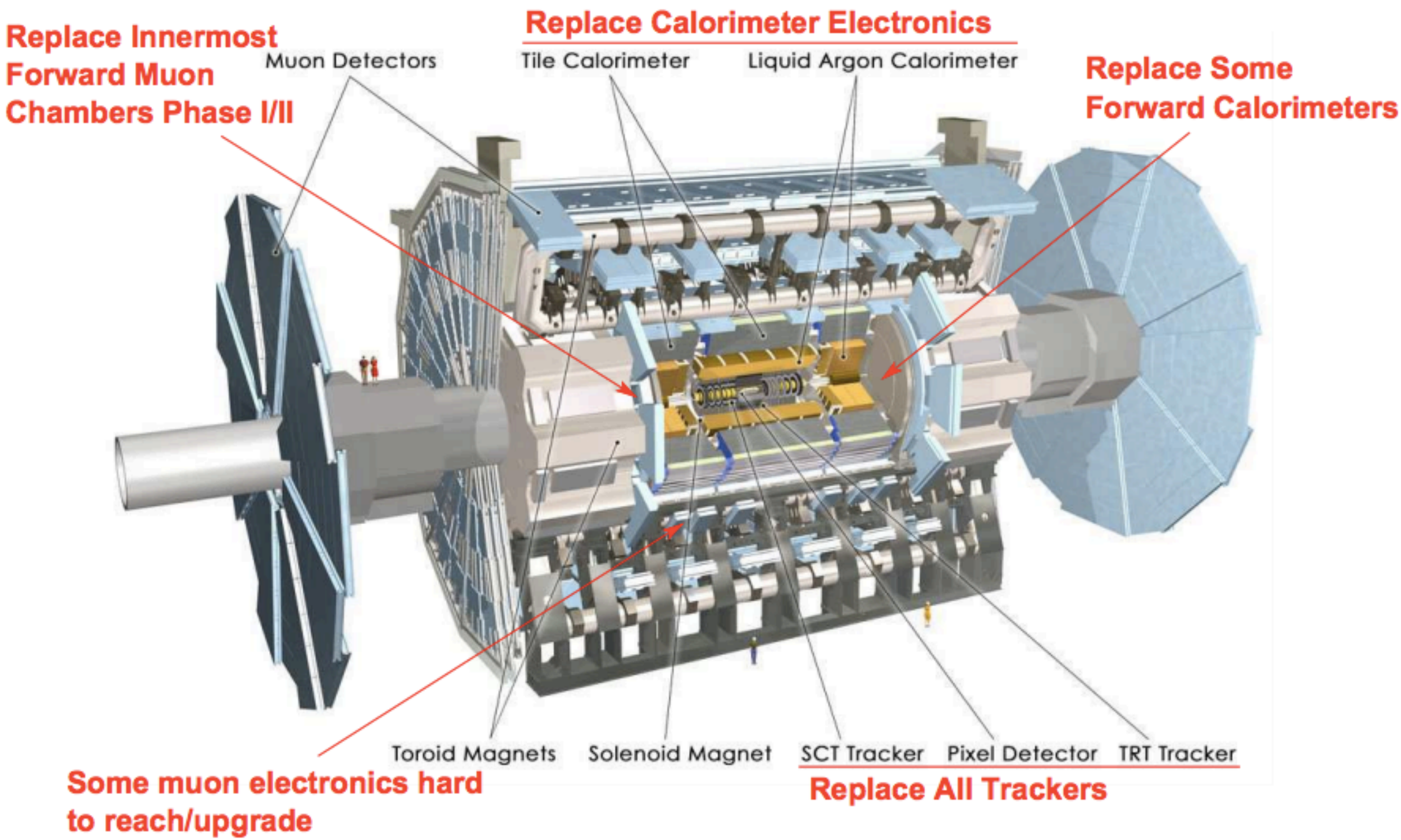

Phase-2 Plan

New ATLAS **"Scoping Document"** just released:
https://cds.cern.ch/record/2055248/

Defines three scenarios with different cost scopes

I'll primarily discuss the "Reference"=most expensive scenarios

Reference Phase-2 Architecture

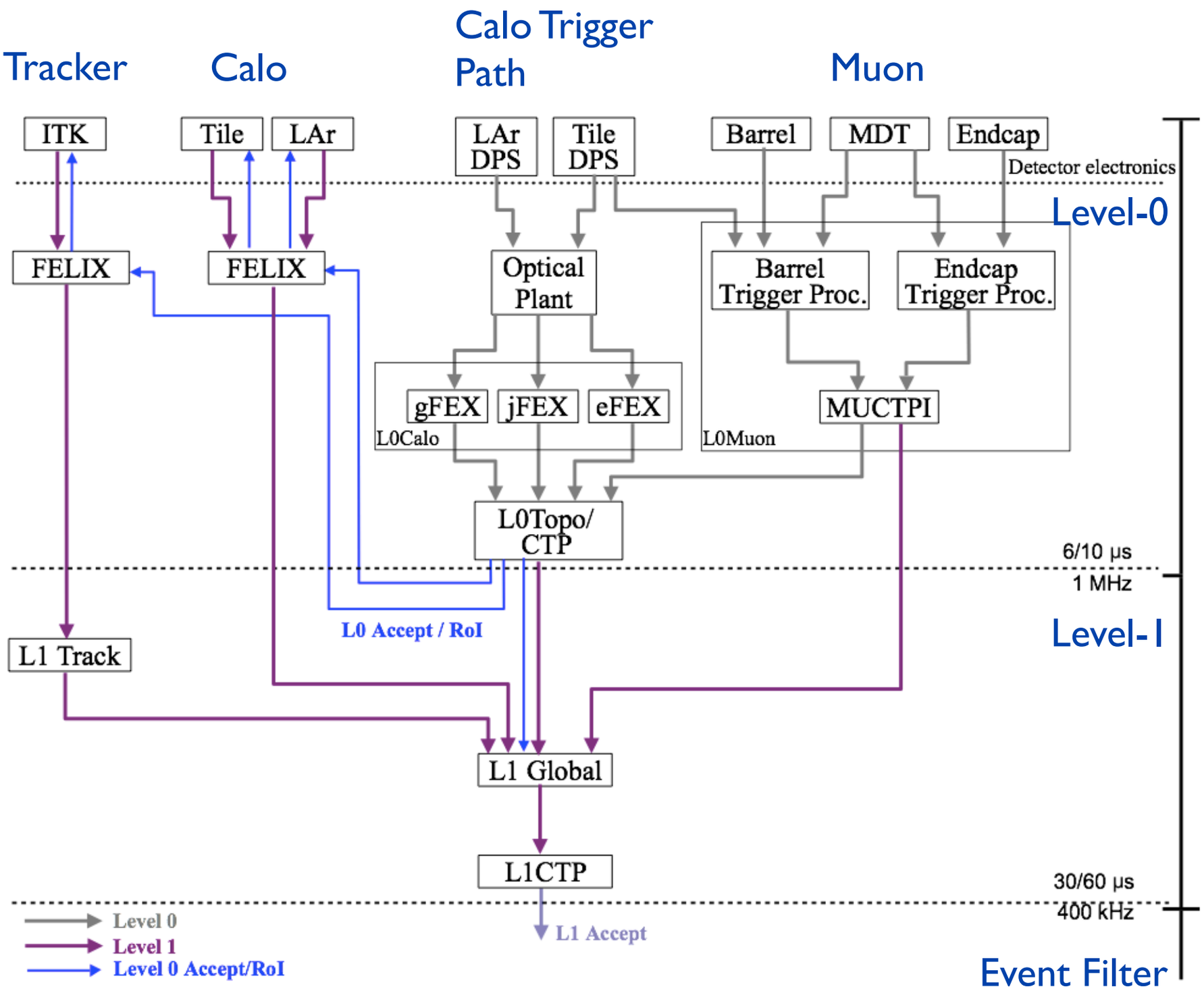

Reference Phase-2 Architecture

Two Hardware Levels

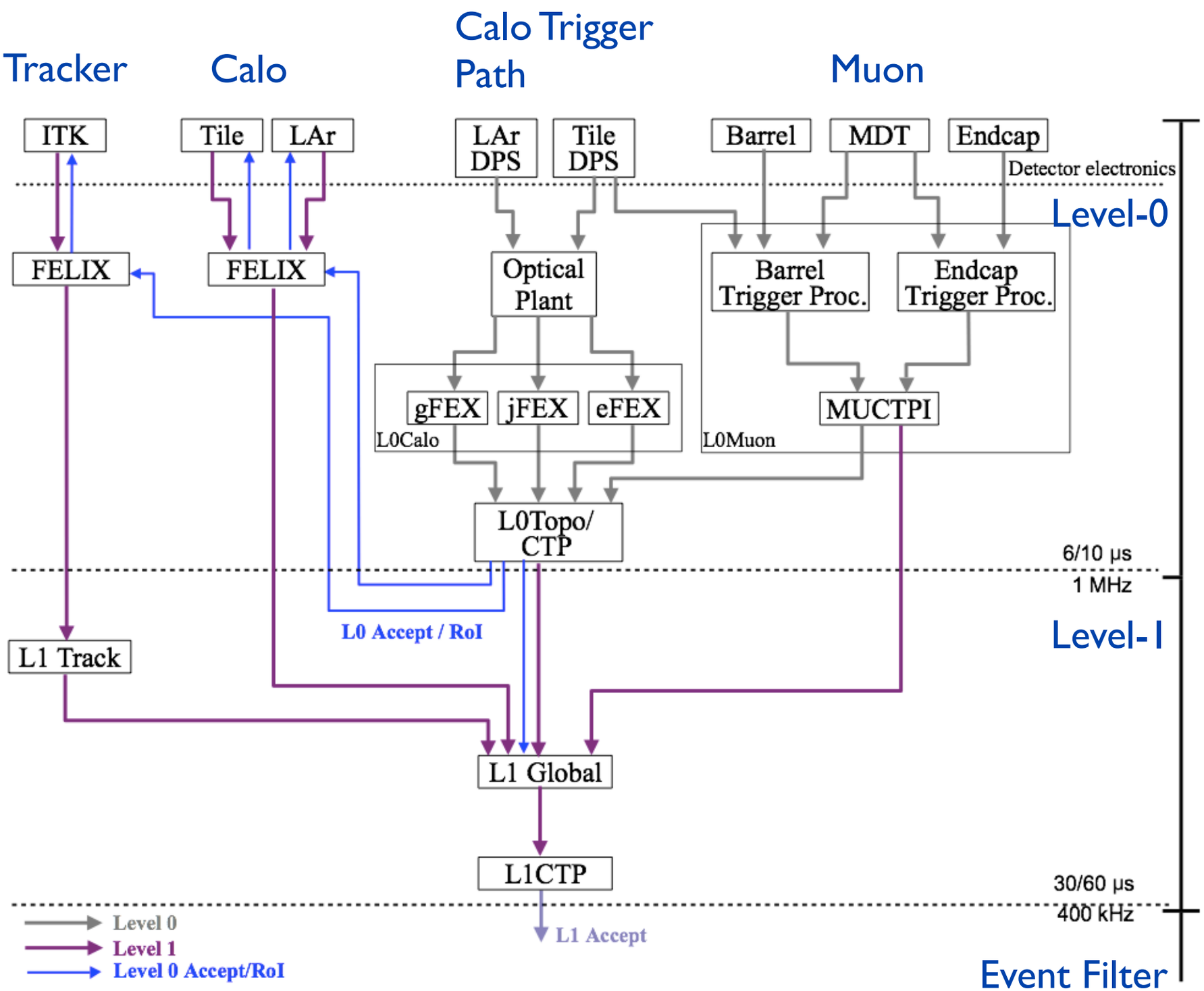

Reference Phase-2 Architecture

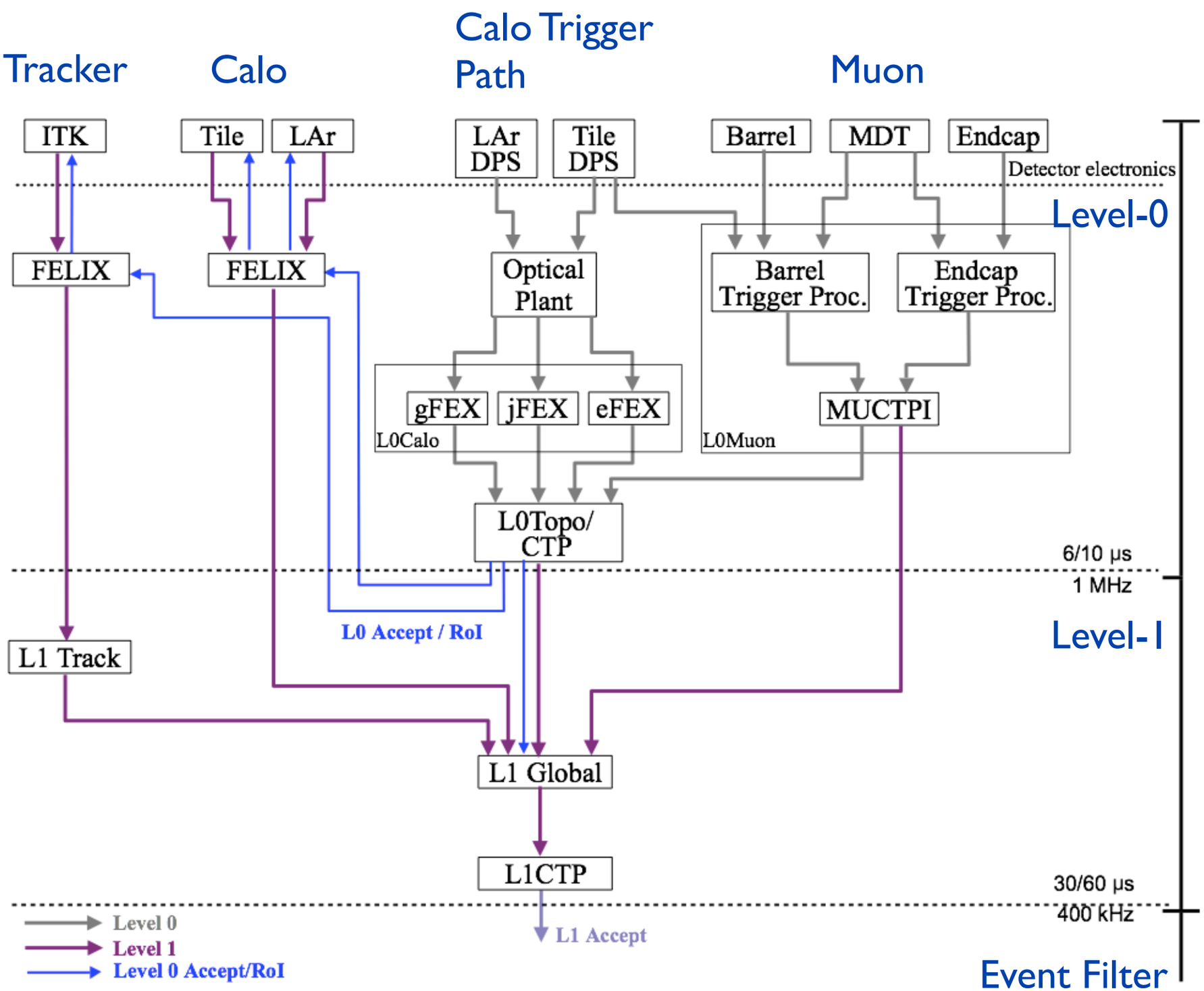

Two Hardware Levels

Level-0

1 MHz rate
6 μs Latency

L0 Calo = Phase-1 L1

L0 Muon: = Phase-1 L1
+ new RPC chambers in barrel
+ existing precision chambers (MDTs)

Reference Phase-2 Architecture

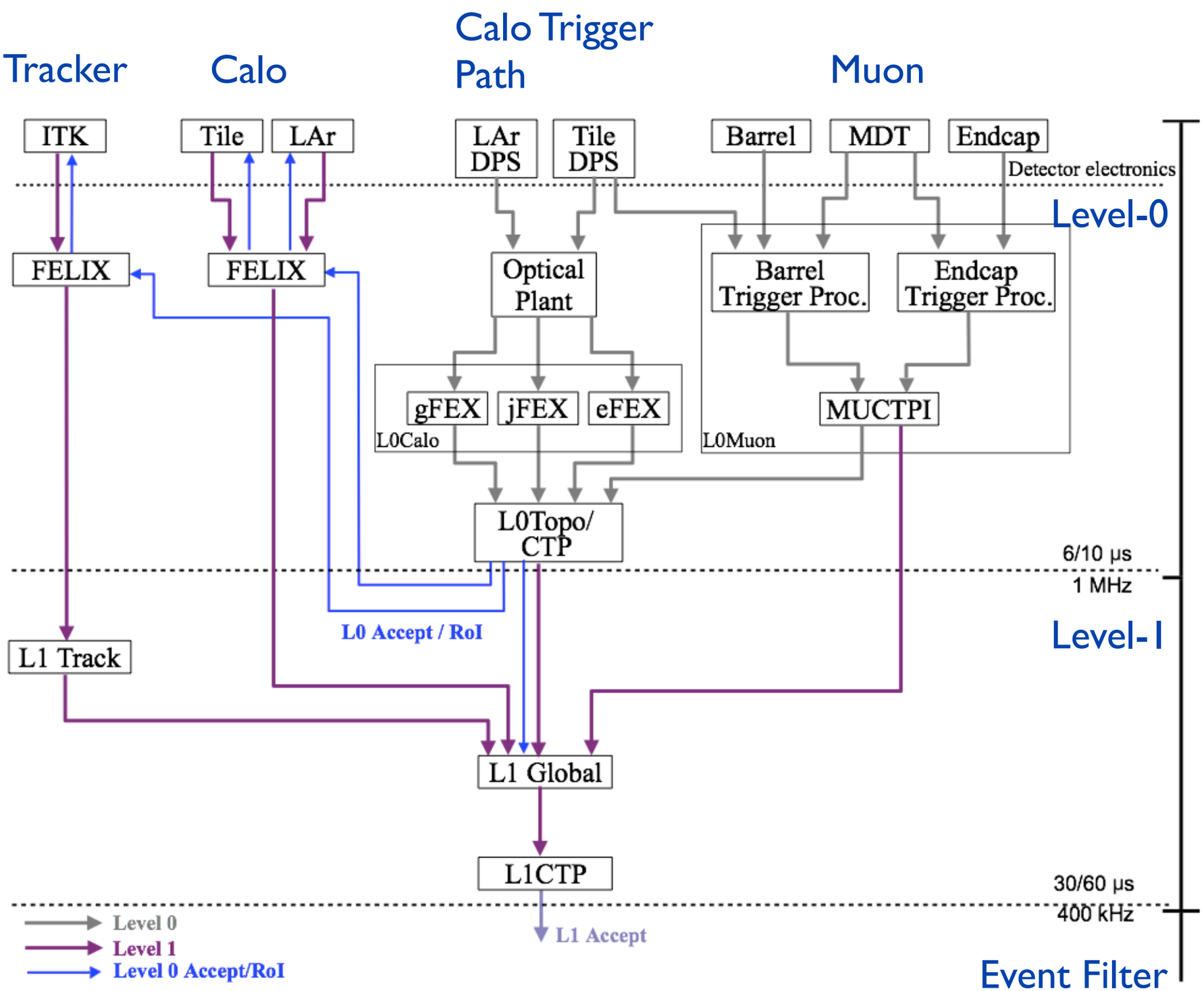

Two Hardware Levels

Level-1

400 KHz rate
30 μs Latency

L1 Track
- Tracking in RoIs at L0 rate
- p_T > 4 GeV
- Probably AM chips

L1 Calo
- Full Granularity (maybe only in RoI)
- Time multiplexed: FPGA or CPU, tbd?
- Can do ~all old HLT but 10x faster!

Reference Phase-2 Architecture

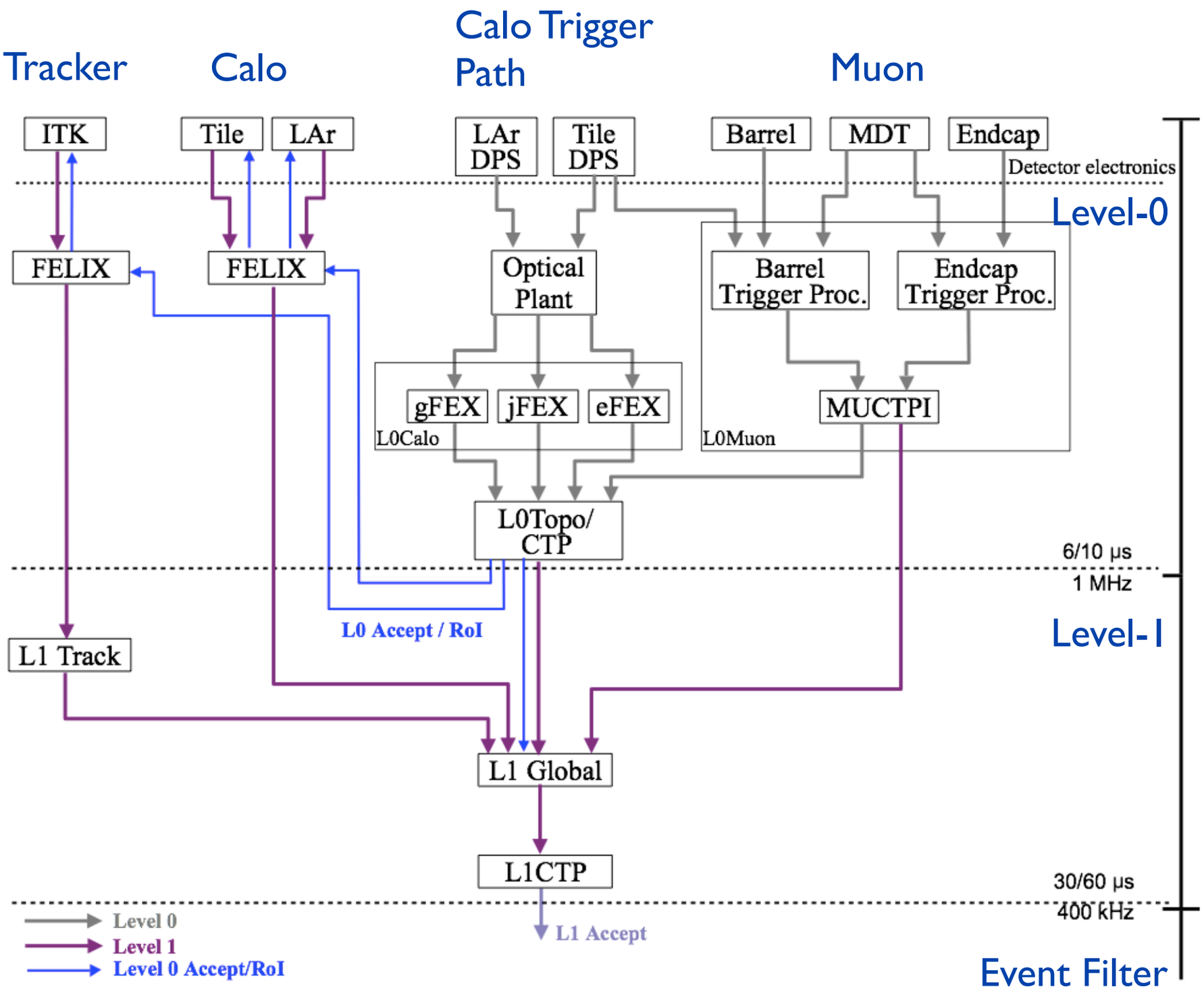

Two Hardware Levels

Event Filter

No Latency constraint
Output rate 5-10 KHz

Aim to keep roughly Run 1 thresholds with offline-like identification

Expect tracking to become more and more important for pile-up suppression

Hardware track finder (FTK++) to give ~100 KHz of full event tracking, p_T > 2 GeV

Phase-2 Plan: Why...

Detector System Constraints

Muon chamber electronics

- replaced in Reference scenario
- ... but, inner MDT electronics hard to reach
- if not replaced, max L1 rate ~200 KHz, max L1 latency 30 μs

New Phase-1 Muon trigger chambers (not built yet!)

- plan to L1 rate 400 KHz, max L1 latency 30 μs

Full Tracker replacement

- 1 MHz full detector readout is reasonable

Both Calorimeters (Tile and Liquid Argon)

- will readout at 40 MHz
- no significant constraints on trigger rates and latency
- but also a trigger opportunity

The constraints leading to the two-level system are not that wide spread
A one level 1 MHz readout may still be possible

Including Tracking in Hardware Trigger

L0 (previous L1 hardware) defined regions on interest using calo and muon information

L1 extracts tracking information in regions of interest at low latency

- data extraction latency a key issue
- requirement is 6 μs from request to out of detector

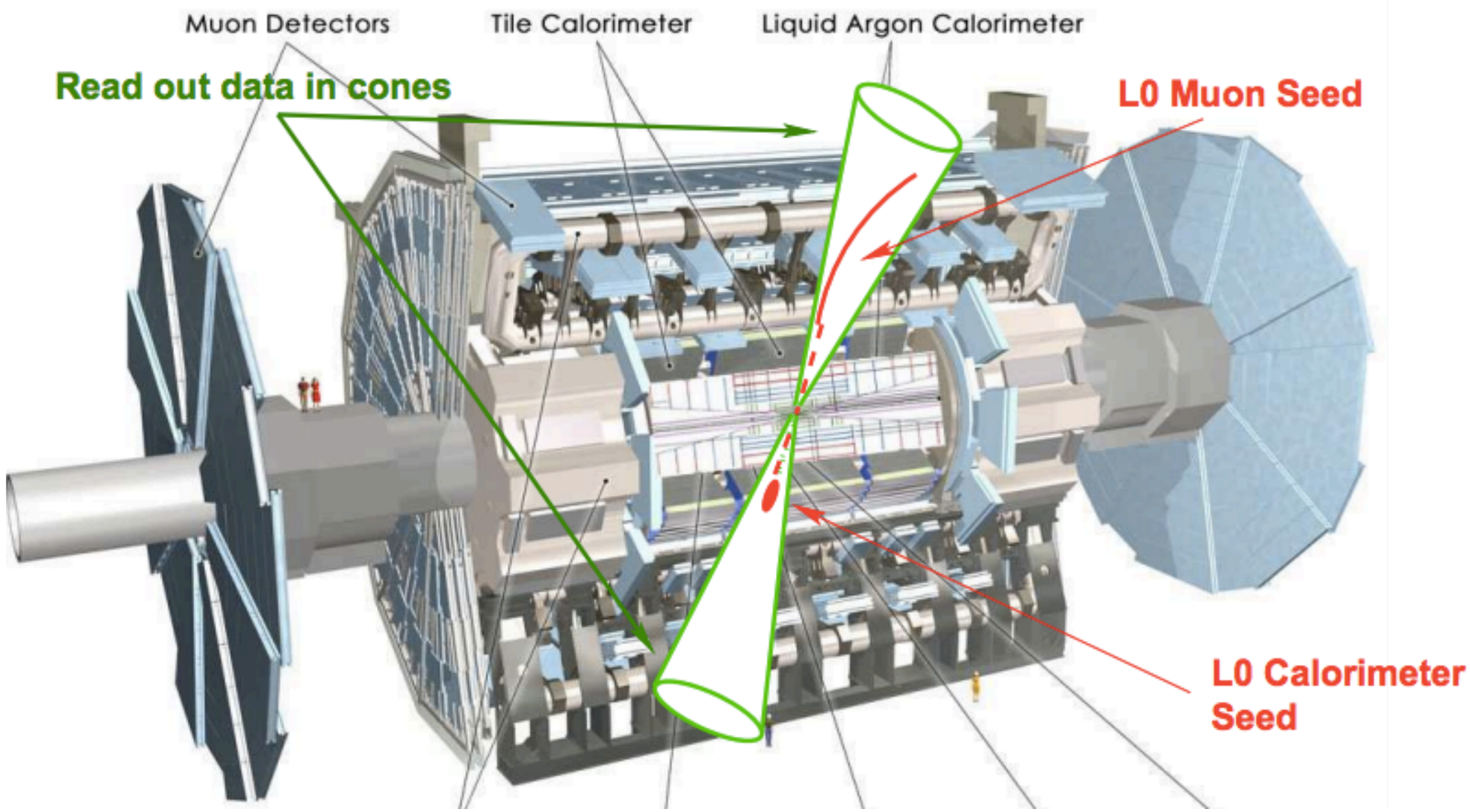

Naive: Data Reduction from Regions

Consider cones in $\eta - \phi$ space

- Typical cones size used for isolation are $\Delta R = \sqrt{\Delta\phi^2 + \Delta\eta^2} = 0.2 - 0.4$
- Fractions of tracking volume in a cone of $\Delta R < r$ is

$$\frac{\pi r^2}{(\eta \text{ range}) \times (\phi \text{ range})}$$

- For a cone of $\Delta R < 0.2$ this is 0.4%
- This allows for a large number of RoIs and a safety margin to fit in 10% RoI request fraction

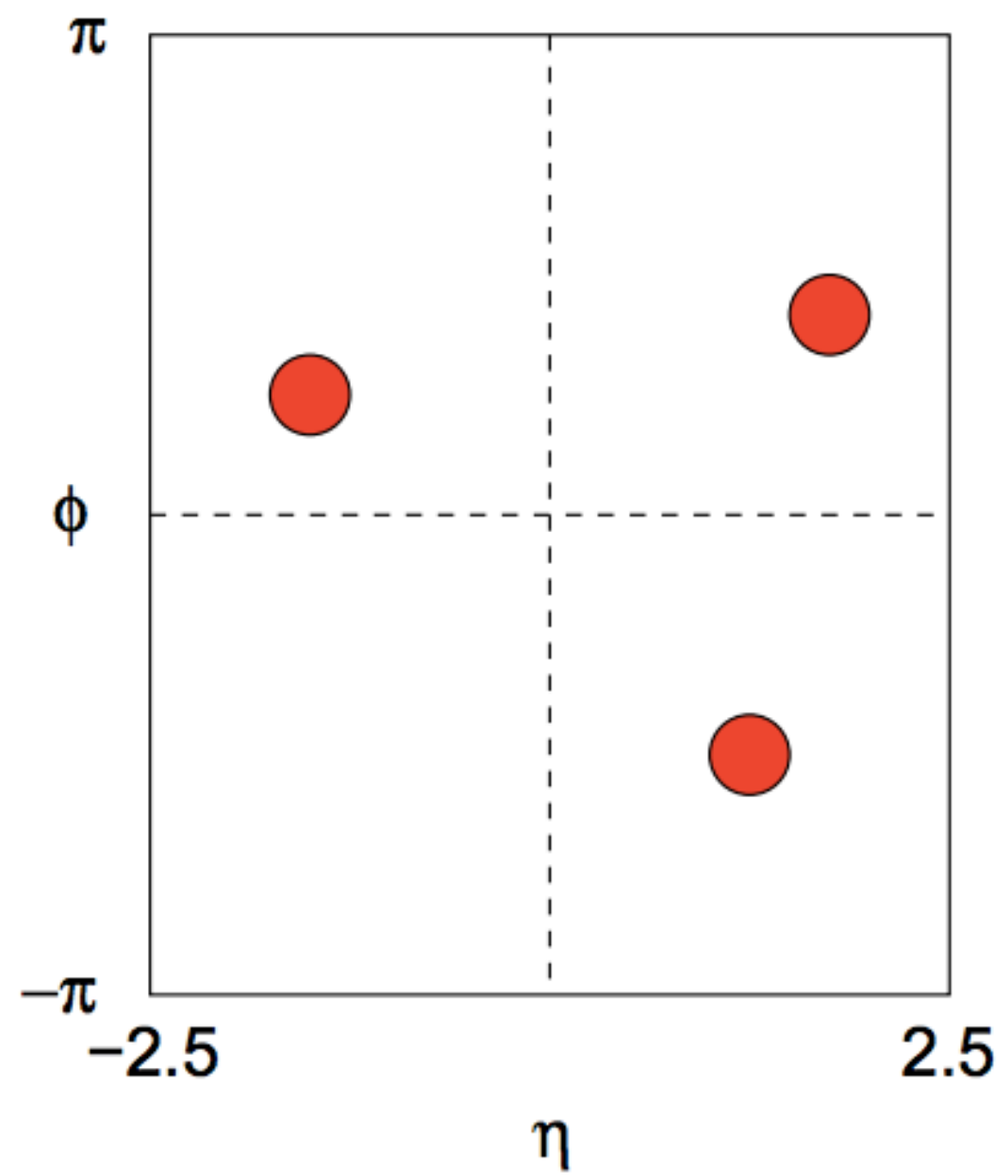

Data Reduction from Regions: Issues

A tricky challenge

- Because of beam spot spread, RoI need to be elongated along beam direction

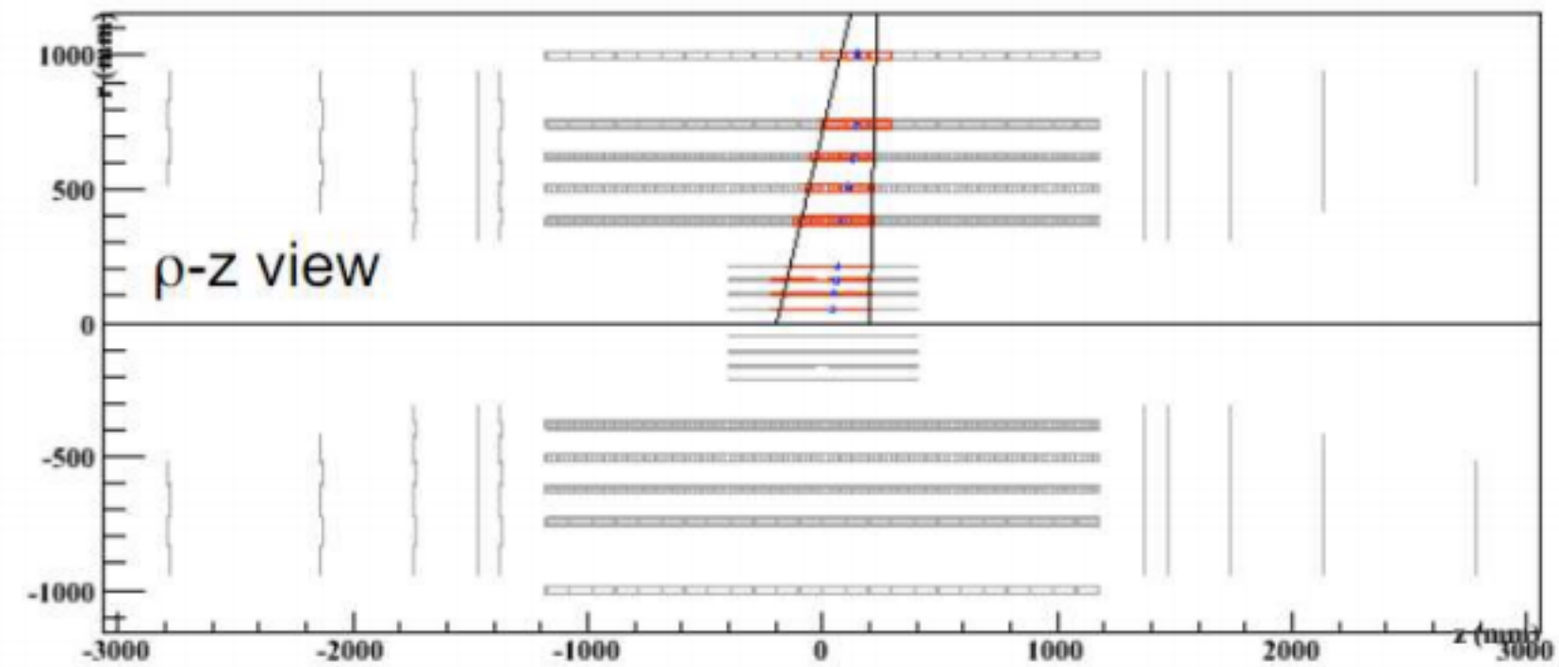

- Large request rate for inner central wafers in inner pixel layers

- Inner layers not really needed for most trigger decisions

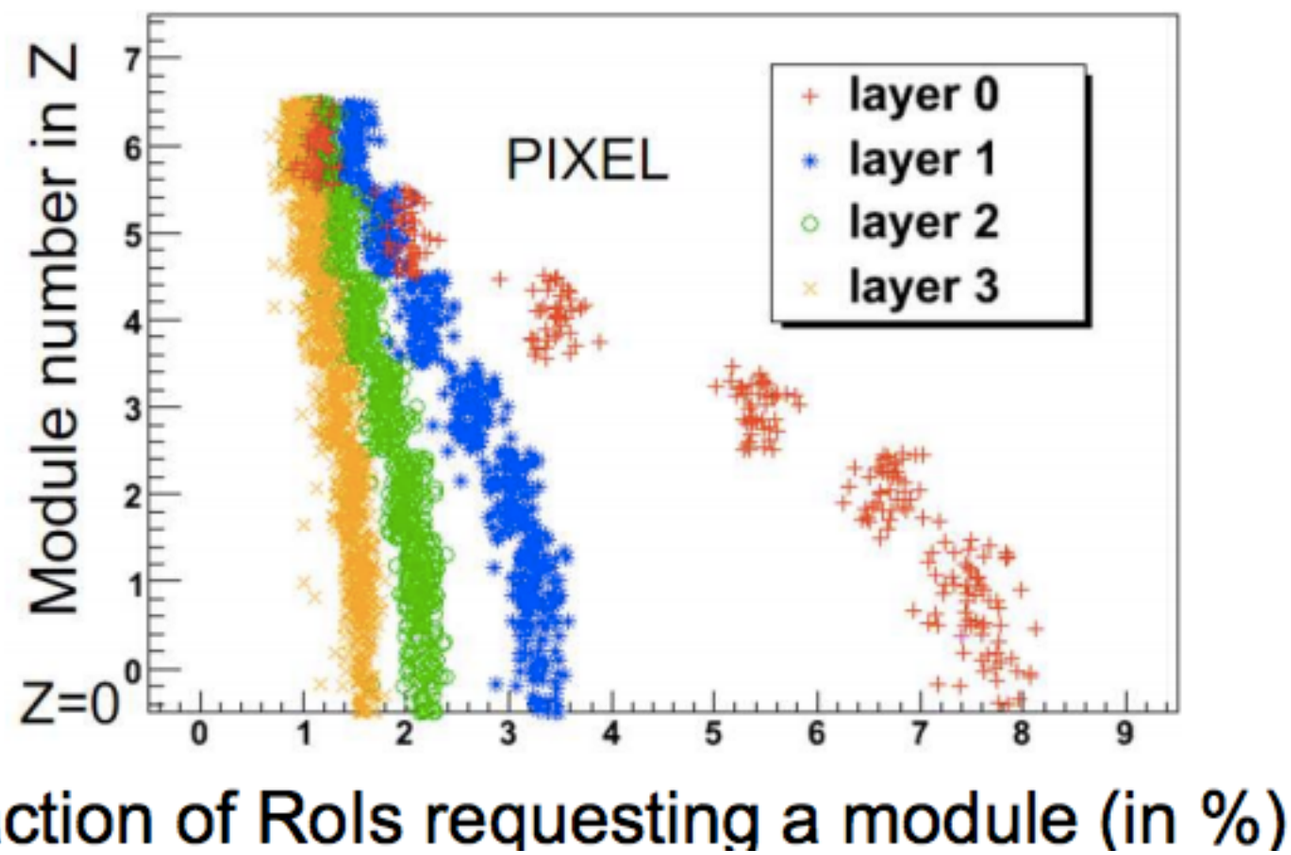

Processing

L1 Track

- Only input information from region of interest around L0 object
- Requirements ~ 10μs
- AM chip-based pattern recognition (see talk from Ted Liu)
  - Content addressable memory searches predefined list of paths="patterns"
  - Duplicate patterns to minimize latency
- Linearized track fits in FPGA
  - Linearized = treat track as a perturbation for a set of precalculated paths

L1 "Global"

- Fine granularity offline-like calorimeter processing
- Track-shower matching, Jet-vertex association
- Time-multiplexed: multiple events (order 10) processed in parallel
- Implementation to be studied (FPGA, CPU, GPU, ...)

FTK++ similar to L1Track and phase-1 FTK

- Hardware track preprocessor for Event Filter
- Full detector track reconstruction at ~100 KHz
  - target mainly low energy hadronic activity

Phase-2 Performance: Electrons

L0 = same granularity Calo-only ID as Phase-1
L1 = add a track requirement
EF = ~full offline requirements

L0 rate

L1 rate
(using track)

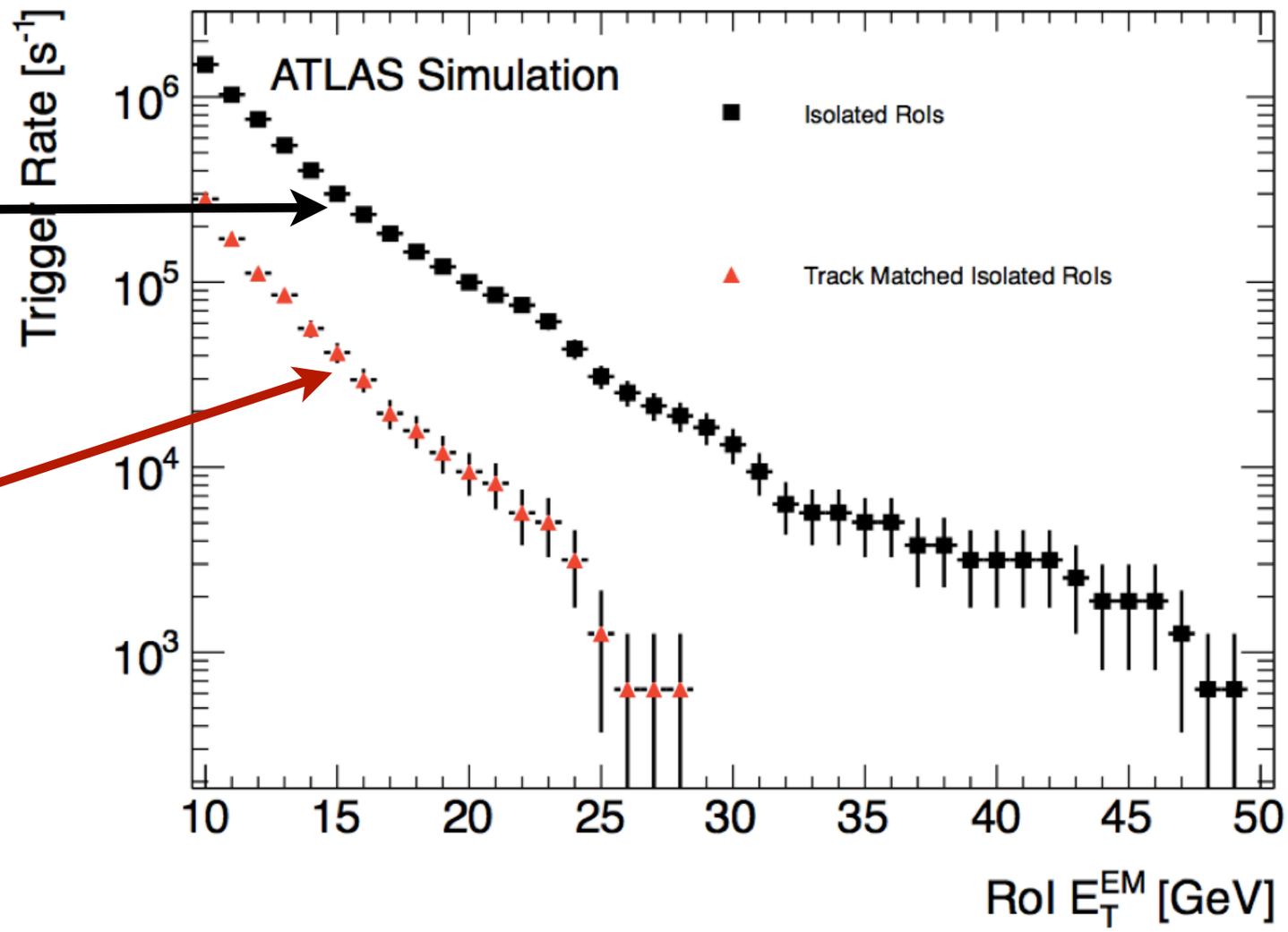

Rejection ~ factor of 5 from tracking
More if needed from fine granularity calorimetry

Phase-2 Performance: Muons

Main issue was L0 efficiency not rate

Increase Muon trigger chamber (RPC) coverage

- New RPCs in barrel region

Add precision chamber information (MDT) previously only HLT/Offline

- Require fewer trigger chamber (RPC, TGC) hits = improves coverage
- Ship all data off detector for pattern recognition

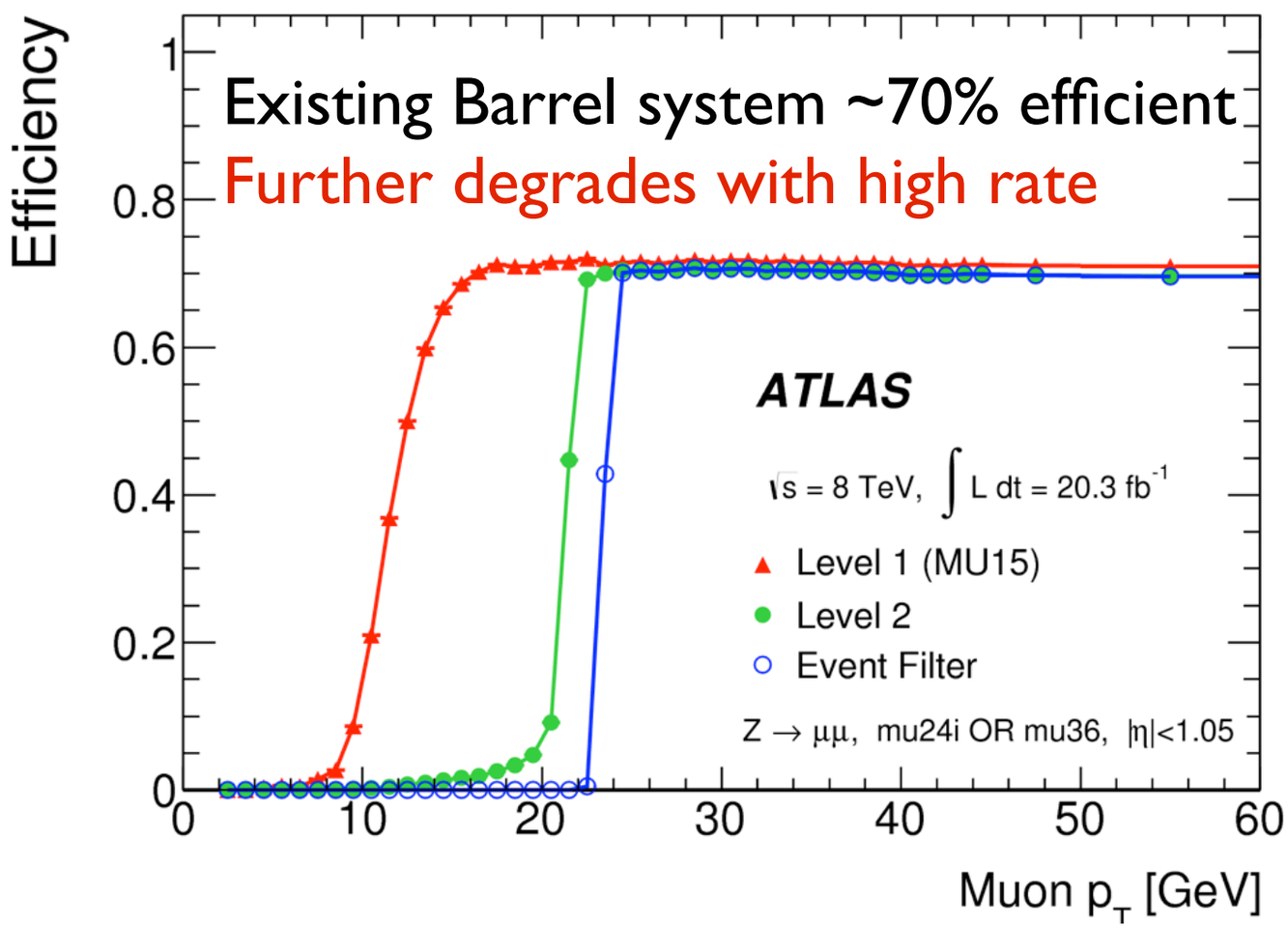

New RPCs + MDT gives ~95% efficiency

Increased resolution also gives ~4-5 additional rejection

Phase-2 Performance: Menu

Approximately maintain (or slightly improve) Run I Thresholds!

Run-1 (2012) Threshold	Item	Offline p_T Threshold [GeV]	Offline $\|\eta\|$	L0 Rate [kHz]	L1 Rate [kHz]	EF Rate [kHz]
25	isolated Single e	22	< 2.5	200	40	2.20
N/A	forward e	35	$2.4 - 4.0$	40	8	0.23
120	single γ	120	< 2.4	66	33	0.27
25	single μ	20	< 2.4	40	40	2.20
25	di-γ	25	< 2.4	8	4	0.18
17	di-e	15	< 2.5	90	10	0.08
12	di-μ	11	< 2.4	20	20	0.25
17,6	$e - \mu$	15	< 2.4	65	10	0.08
100	single τ	150	< 2.5	20	10	0.13
40,30	di-τ	40,30	< 2.5	200	30	0.08
200	single jet	180	< 3.2	60	30	0.60*
N/A	fat jet	375	< 3.2	35	20	0.35*
55	four-jet	75	< 3.2	50	25	0.50*
N/A	H_T	500	< 3.2	60	30	0.60*
120	E_T^{miss}	200	< 4.9	50	25	0.50*
150,120	jet + E_T^{miss}	140,125	< 4.9	60	30	0.30*
200	forward jet**	180	3.2 - 4.9	30	15	0.30*
	Total			~1000	~400	~10

ATLAS Phase-2 Summary

Penn
UNIVERSITY of PENNSYLVANIA

Able to preserve Run 1 (2012) level thresholds

This is key because HL-LHC is not just about very high p_T

Weak coupling physics at moderate electroweak scale is a key part of the program and a trigger challenge

Split Level Hardware System

Allows tracking and fine granularity calorimeter information before full detector readout

General Migration of Offline-like algorithms to High Level Trigger then to L1

Backup

Beyond HL-LHC

The FCC-hh program would involve very large luminosities and pile-up levels

- First phase similar to HL-LHC
  - Like build HL-LHC later (obviously we already have solutions that work)
- Luminosities of up to 25×10^{34} as "ultimate level" (~4xHL-LHC)
  - This seems like a real detector challenge

Timeline = data-taking sometime after 2035

What is there to say about triggering now?

- Very general thoughts...

Ideal trigger would allow one to make cuts on the same quantities as offline before saving the limit of offline computing capacity

Two constraints limit that

- Getting data off the detector
- Processing the data

I'll use "40 MHz" to mean beam crossing rate, it could be 200 MHz of lower pile-up events

Calorimeters and Detectors

Penn
UNIVERSITY of PENNSYLVANIA

Getting data off the detector

- Already ATLAS planning to readout calorimeters at 40 MHz = beam crossing rate
- Increased channels and more information/channel might make that harder
- But we will still likely be able to read all calorimeter and muon information at the full beam crossing rate

Processing

- Probably not that hard either
- Small ASIC feature sizes mean large memories and long available latencies

Conclusion: large available bandwidths mean dedicated trigger data paths and trigger detectors with probably not be so important

Tracking

Getting data off detector

- Data scales with number of tracks (~luminosity)
- ATLAS will probably be able to readout tracker at 1-2 MHz
  - Fairly conservative design for strips detector
- Far from 40 MHz and increased data may make it more challenging
- Key question is whether we can readout tracker at beam crossing rate
- If not then need data reduction
  - L1 trigger,
  - more complicated p_T filtering (=CMS) or regional filtering (=ATLAS)

Processing

- Is 40 MHz tracking possible? I have no real knowledge

Important thing to think about:

- Designing a detector for **particle-flow**
  - Either the calorimeter must do well enough on it's own to do triggering

  or
  - You need tracking at the beam crossing rate

Baseline Tracker Layout

All Silicon Tracker

Long Strips
2 Layers

Short Strips
3 Layers

Pixels
4 Layers

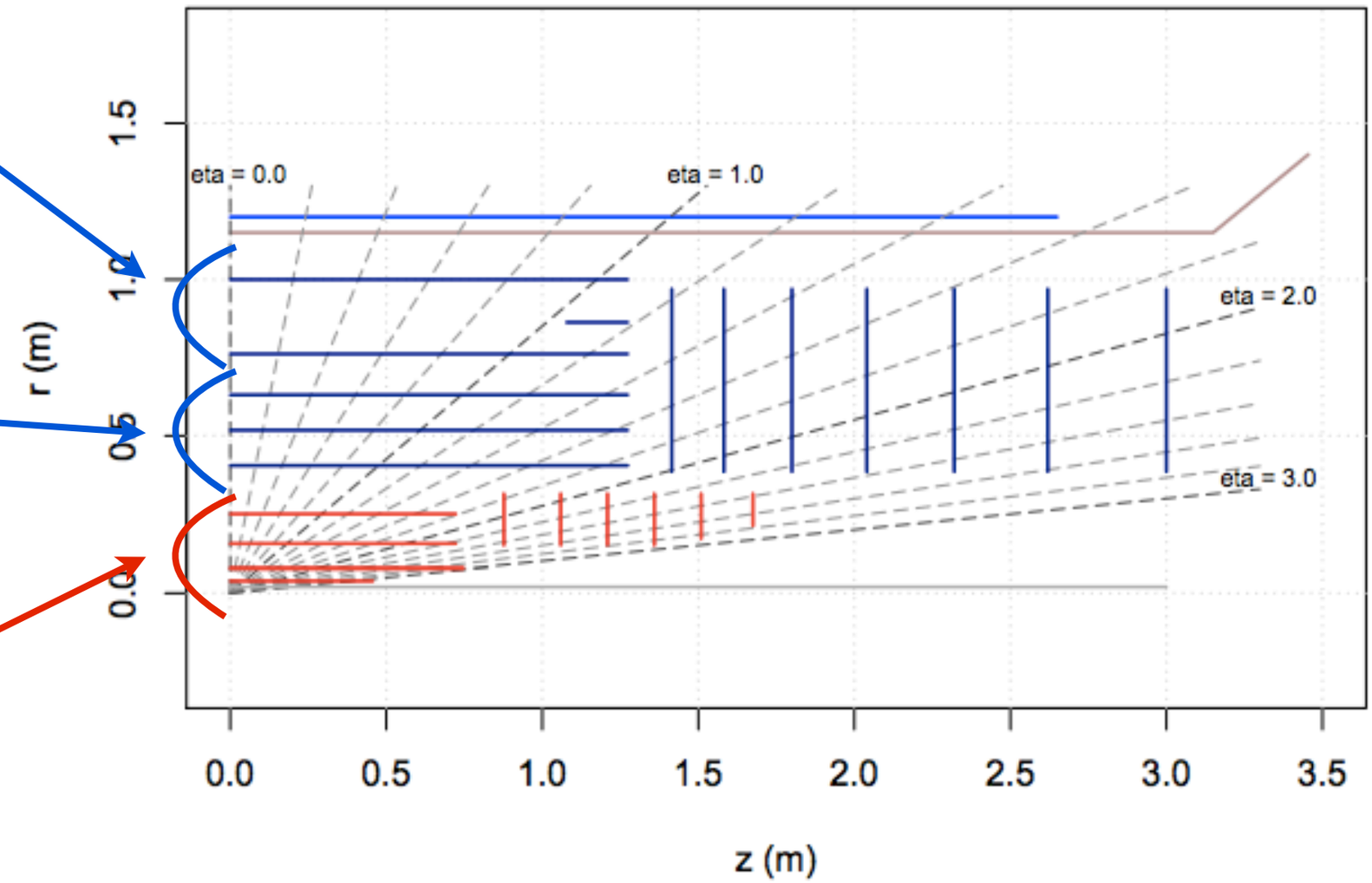

- Alternative optimizations still being studied (resolution, fakes, material)
- Strips are designed to have one-side as a low angle stereo
- Details in Phase-2 "Letter of Intent"

Strips design

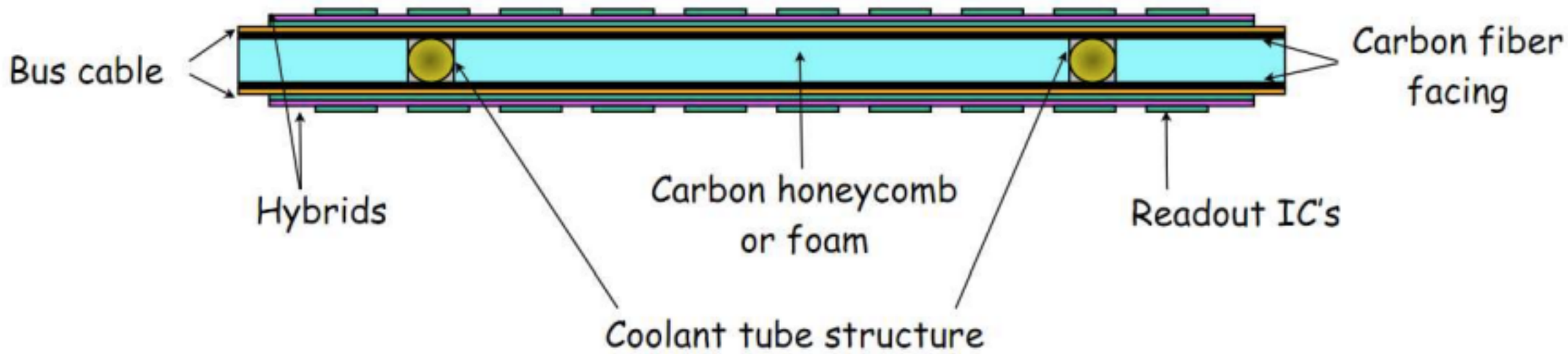

Barrel

Endcap

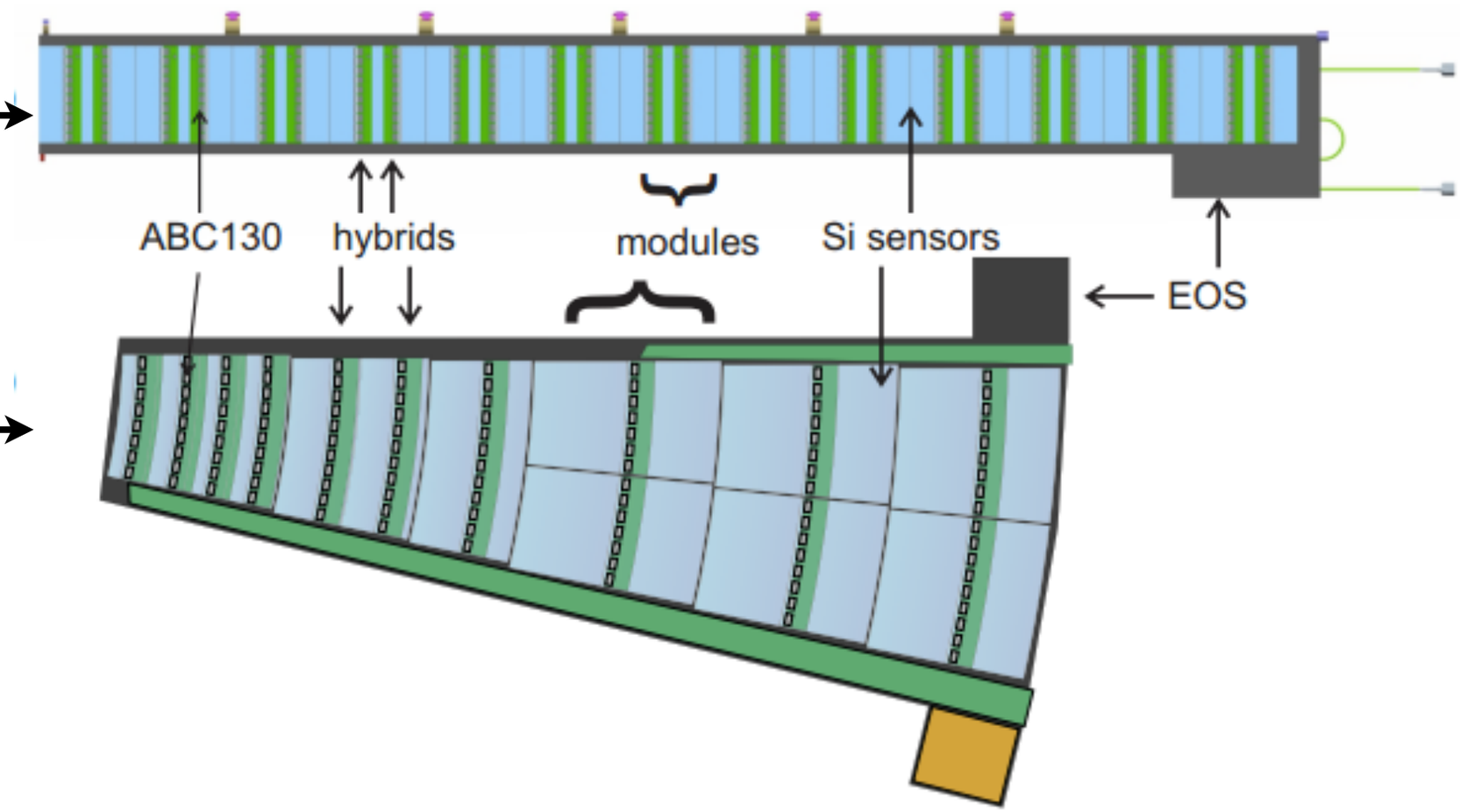

Two-buffer scheme

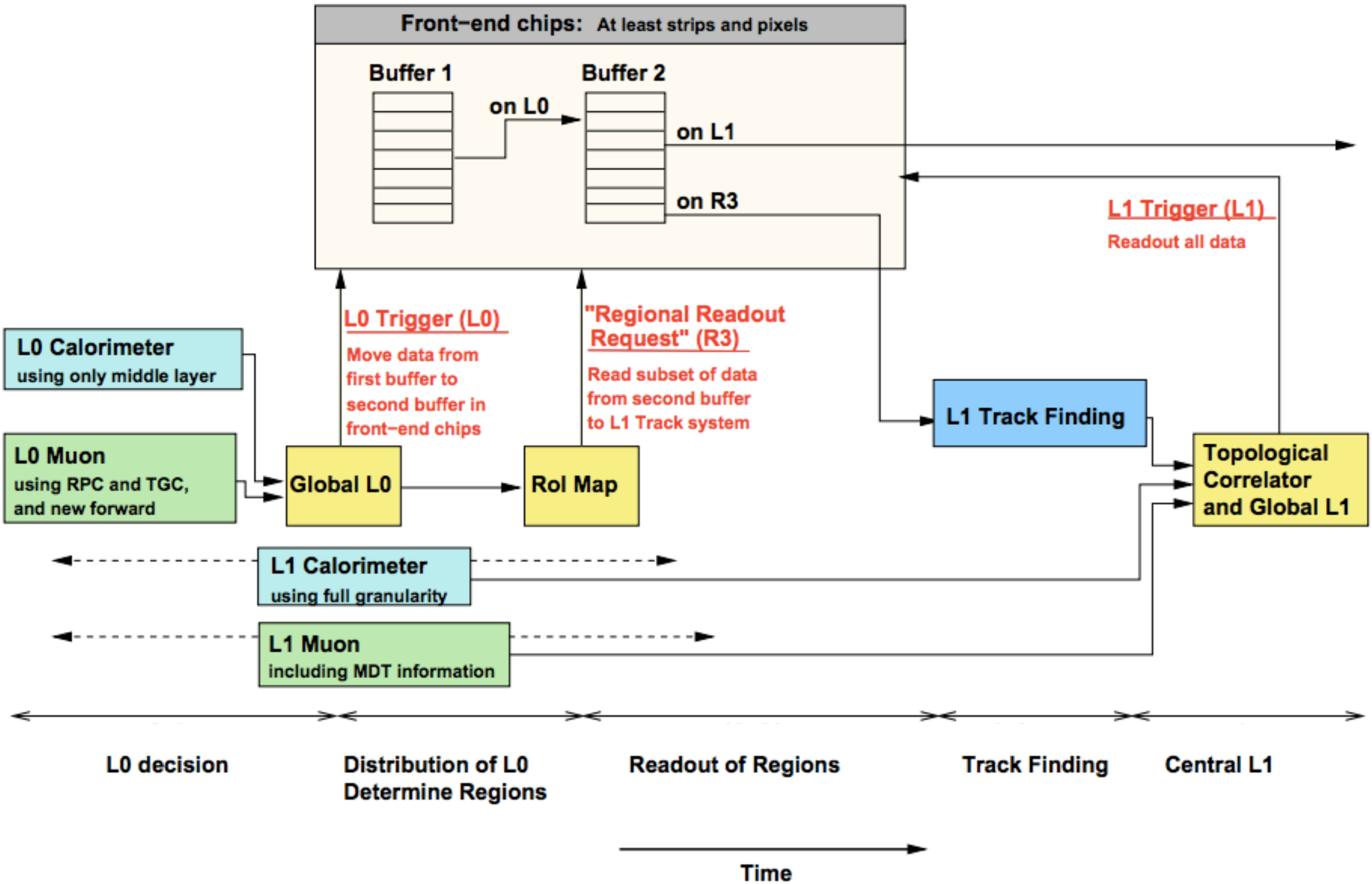

Two-buffer scheme

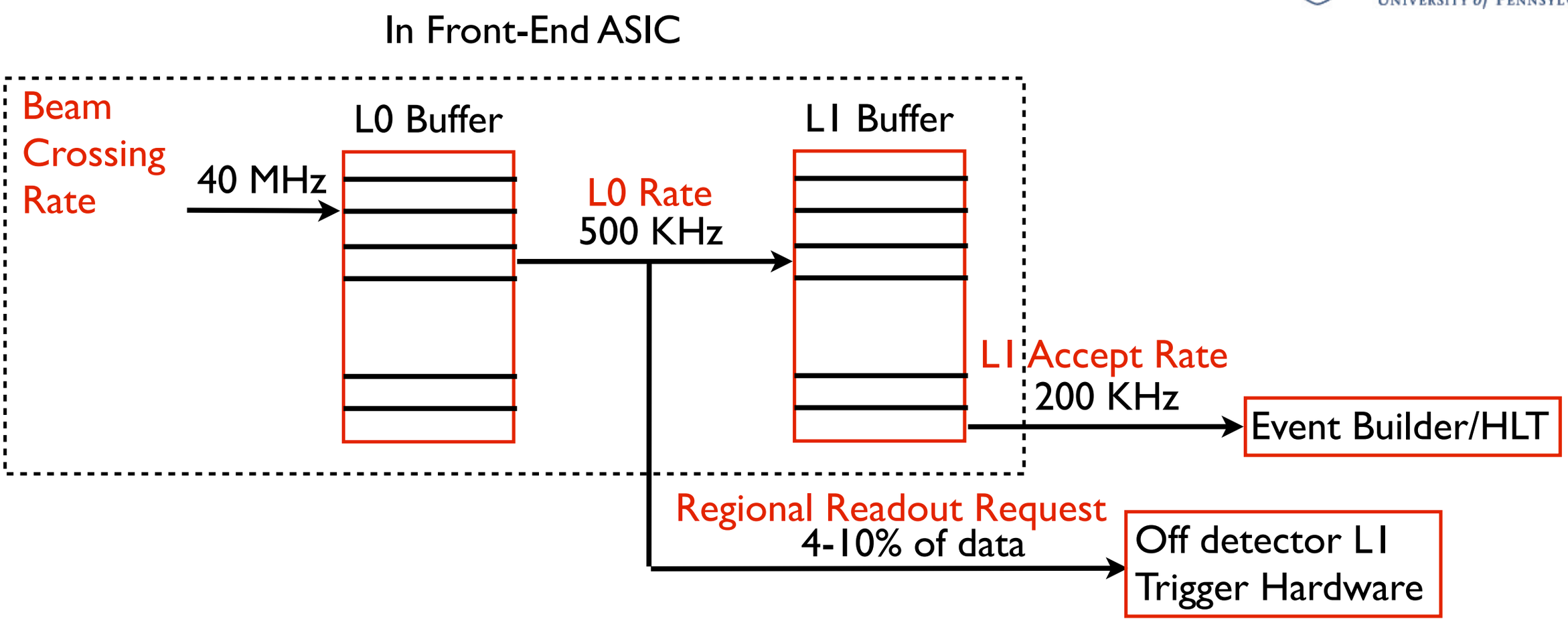

Bandwidth = L1 Rate + L0 Rate × fraction of data in RoI

Nominal parameters:

L0 Rate = 500 KHz, L1 Rate = 200 KHz, RoI fraction = 10%

$$\text{L0 Latency} = \frac{\text{L0 Buffer length (in events)}}{\text{Beam Crossing rate}} \approx \frac{128}{40\text{MHz}} \approx 3.2\mu s$$

$$\text{L1 Latency} = \frac{\text{L1 Buffer length (in events)}}{\text{L0 Rate}} \approx \frac{128}{500\text{KHz}} \approx 256\mu s$$

Problems with pile-up

One might think we can make it up with l+X triggers (where X=jets, met, more leptons,...)

Multiobject triggers scale badly with pile-up...

If p is the probability that a single collision produces object passing a given threshold

Then the trigger rate for that object is

$$\text{Rate} = p\mu f$$

where f is the frequency of crossings and μ is the number of collisions per crossing

The rate for a coincidence of two such objects is approximately

$$\text{Rate} = \frac{1}{2}(p\mu)^2 f$$

I.e. it grows with the square of μ, and worse for more objects!!!