UCB Version Glass Package Design & Status

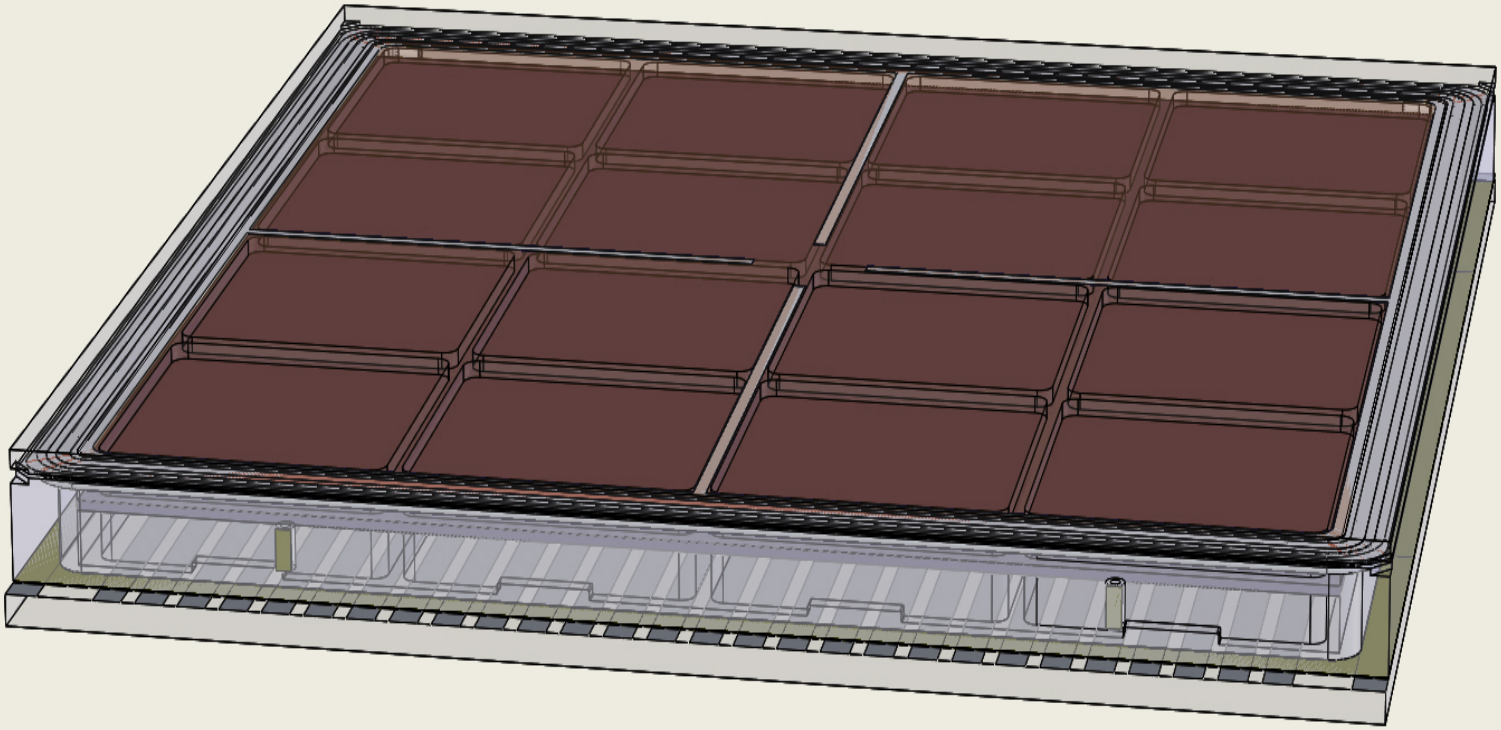

Jason McPhate & Oswald Siegmund

LAPPD Hermetic Package Godparent Review

3 April 2013

Motivation

- Phase I of Incom STTR involves fabrication of a demonstration glass package sealed tube at UCB
- Backup to ceramic package at UCB for LAPPD
- Modifications to UC/ANL glass package needed for processing at UCB
  - Demonstrate that all components/materials are compatible with high temp vacuum bake
  - Indium groove in sidewall to accommodate UCB hot seal
  - Methodology for securing internal stack
  - Deterministic scheme for internal HV distribution
  - Design and tooling modification for processing in UCB tank
- More efficient for UCB to take ownership of this branch of the glass package development

Design Overview

- Strong lineage to UC/ANL glass package
  - Don't fix what ain't broken
  - All glass parts (Schott B33 except MCPs)
  - Silver screened anode pattern
- All piece parts identical to UC/ANL design except sidewall, bottom grid spacer, and anode screen pattern
- Modifications made to accommodate processing at UCB

Design Strategy and Requirements

- Retain existing package architecture to the greatest extent possible
  - Leverage existing design and experience
  - Minimal changes to readout electronics and process tooling
- Must survive ≥350°C vacuum bake
- Compatible with transfer photocathode and hot seal
- Robust against MCP resistance evolution during processing or tube life
- Physically robust against atmospheric pressure
- Try to use standard B33 thicknesses wherever possible

Modifications

- Strive for minimal modifications to make packages similar
- Groove in top surface of sidewall as an indium well
- Deterministic scheme for internal HV distribution
- Modification to anode layout for HV distribution
- Increase height of sidewall and bottom spacer
- Self-contained internal stack clamping scheme
- Different frit for anode-sidewall joint, with higher glass transition temperature

Design Detail – Indium Groove

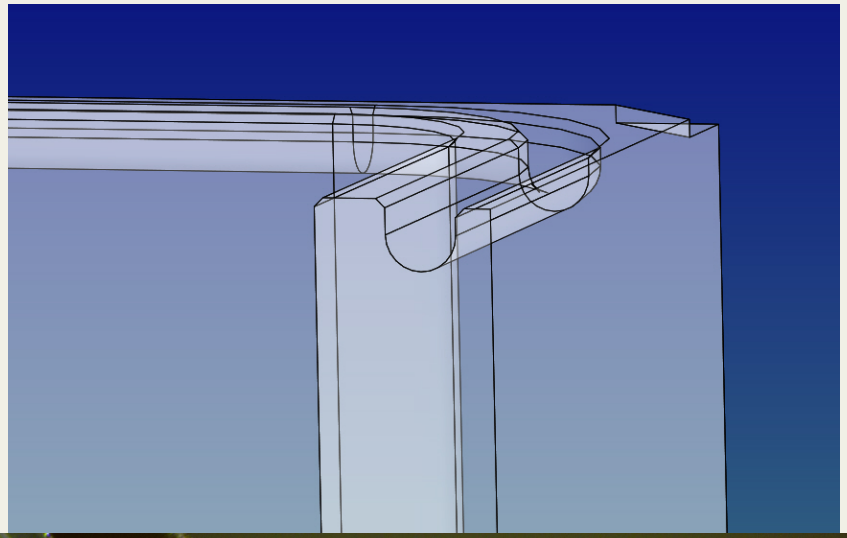

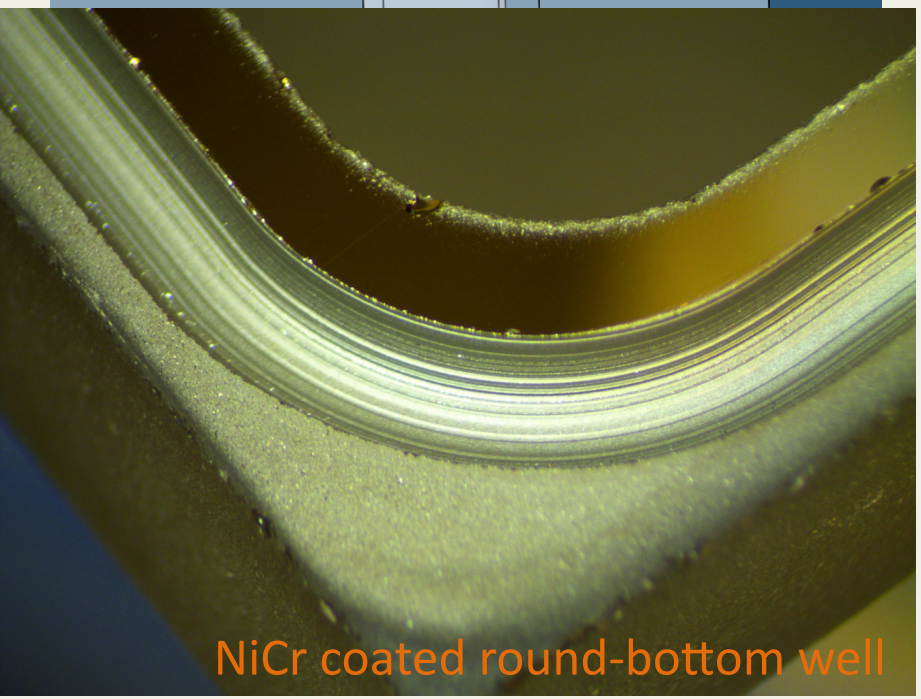

- Diamond milled into the top surface of sidewall by “UC Bob”
- .080” wide groove with full radius round bottom
- Groove outboard from center of .200” wide wall
- Interior groove wall is full height for window support
- Exterior groove wall is relieved by .020” for indium runout
- Modifications from this baseline are forthcoming

Design Detail – Stack Height

- Present UC/ANL design results in a rear field gap of ~2.75mm. Too thin for good charge spreading.
- Want closer to 6mm given the large anode pitch (~7mm).
- Upper internal stack is fixed (within tolerances)
  - MCPs are 1.2mm thick
  - ANL experience with grid spacers dictates ≥2mm for robustness
- Try to use standard B33 thicknesses if possible for wall and bottom spacer.
- Suggests best solution is 13mm wall with 6.5mm spacer (see tables in backup material for stack options)

Glass Package Modified Stack

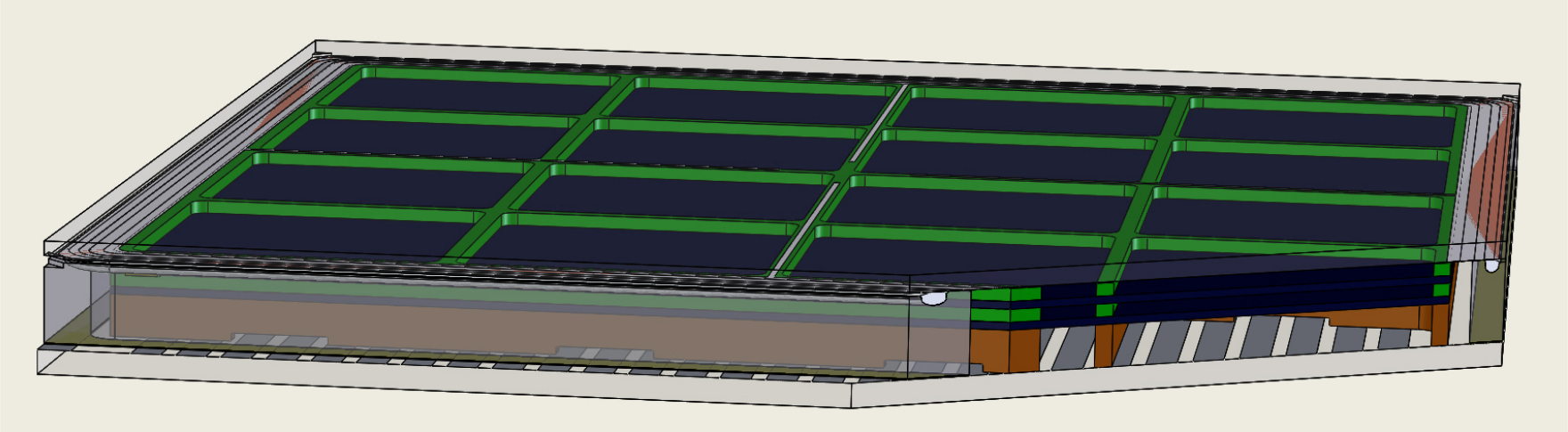

13 mm sidewall. 2 mm upper grid spacers. 6.5 mm anode grid spacer.

Assume a .006” shorter internal stack compared to sidewall height. Conservative, hope for closer to .004” or so.

Perform finite element analysis (FEA) to determine stress in window/anode when loaded with atmospheric pressure to determine optimal thickness.

Shown with 2.75 mm window/anode above.

FEA Synopsis

- Suggests there is critical stress buildup at the top, inside edges of the sidewall – independent of window thickness (see backup slides)
- Results are highly dependent on boundary conditions between indium and sidewall groove
- Sufficient doubt about the accuracy of the model in the key region of the indium to glass interface to imply empirical testing is needed
- Two notable results of the modeling:
  - There is no buildup of critical stress in the window at any thickness
  - Constraining the bottom of the sidewall (ala the frit) is key to inducing the high stress at the top
- We are therefore staying with the 2.75 mm window and anode thickness and moving forward with plans to perform multiple seals tests for mechanical purposes

Anode Screening Pattern

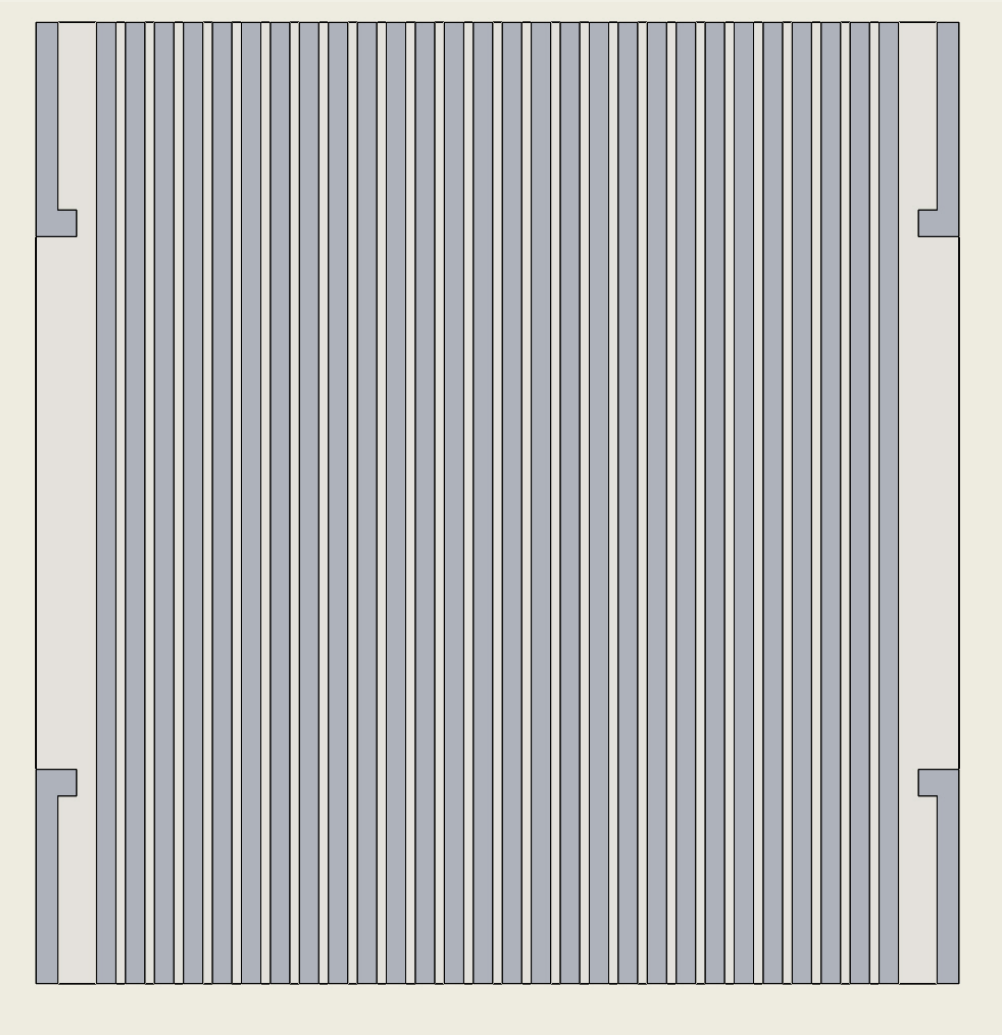

- Based closely on the UC/ANL 30-strip anode
- Substrate 9.02” x 8.66”
- End signal strips (#1 and #30) are almost completely covered by grid spacer → Eliminate them entirely
- Keep remaining 28 signal strips unchanged (p=.272”, w=.182”)
- Convert 2x wide, edge strips (under the sidewall) into 4x HV distribution traces – one at each corner

Tile Base

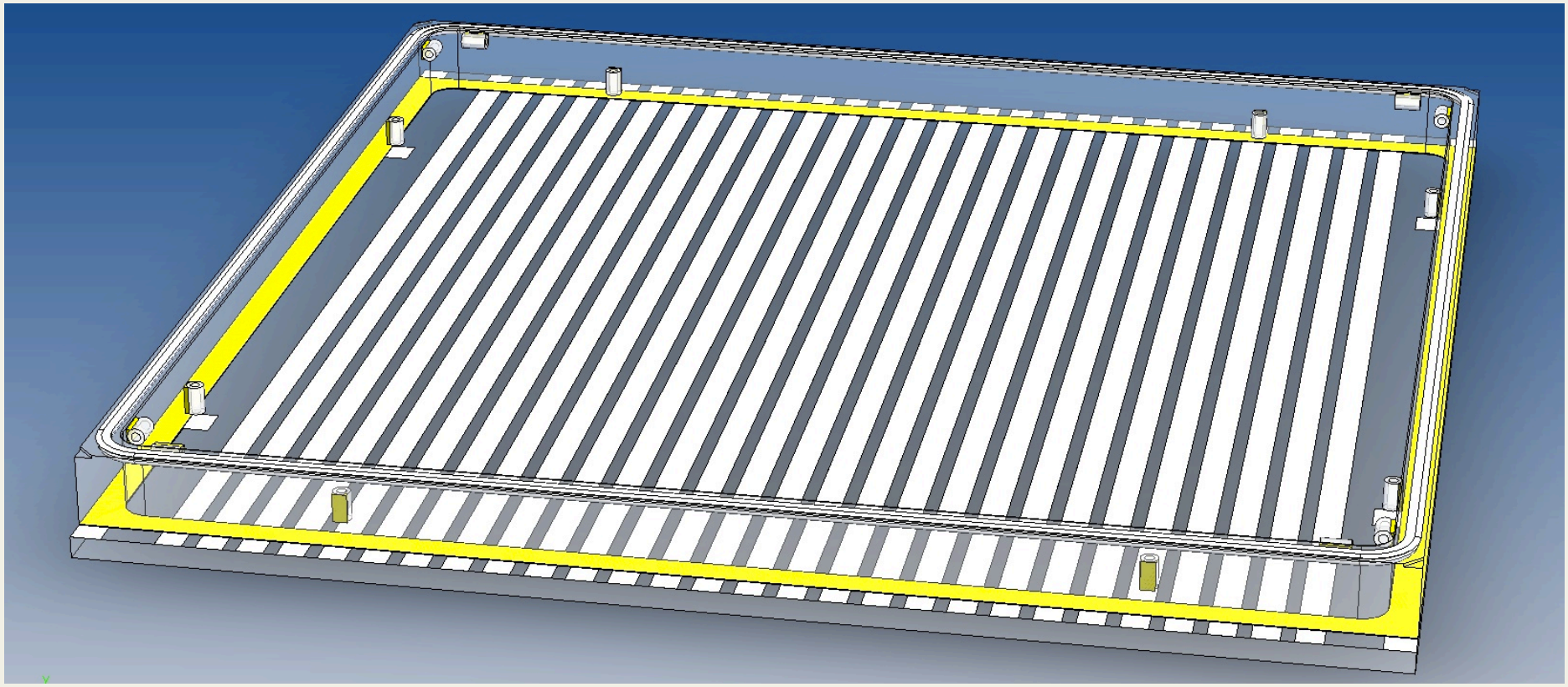

- Anode and sidewall are frit bonded together
- HV traces extend inside the tube area, but are well isolated from the strips
- Small glass tubes are bonded to the sidewall in various location as tie down points
  - Need Joe Gregar's advice here
- Shown with indium well filled

UCB Glass Package Components

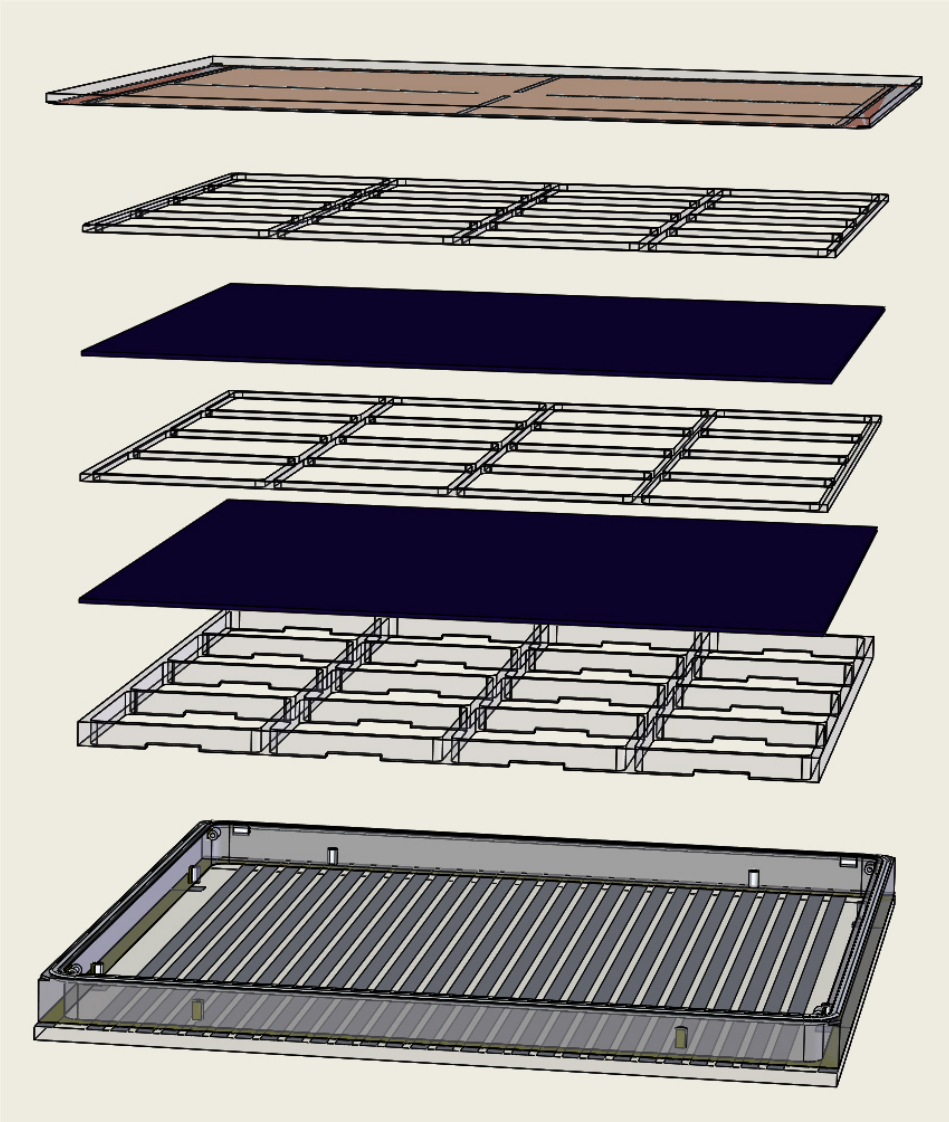

- Window with NiCr and Cu evaporation layers
- Top grid spacer, 2 mm with top corner detents for stack hold down
- Top MCP (Chem-1/Al_2O_3)
- Middle grid spacer, 2 mm
- Bottom MCP (Chem-1/MgO)
- Bottom grid spacer, 6.5mm with vent grooves

- Tile base: 13 mm sidewall, frit bond, anode, hold-down tubes

Internal Stack Clamping and HV Distribution (Preliminary)

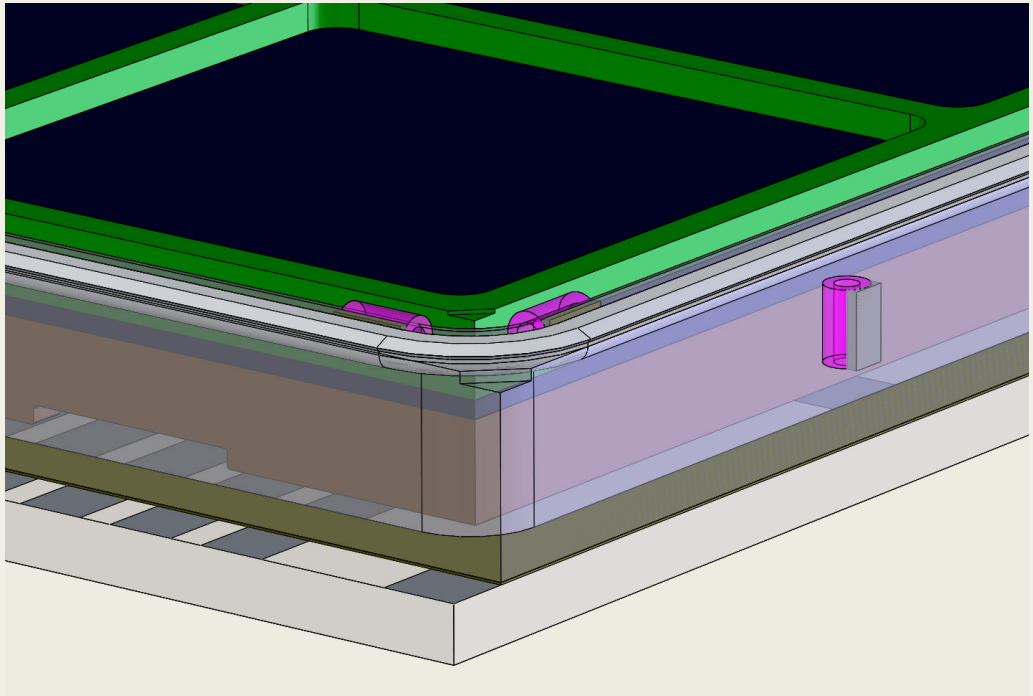

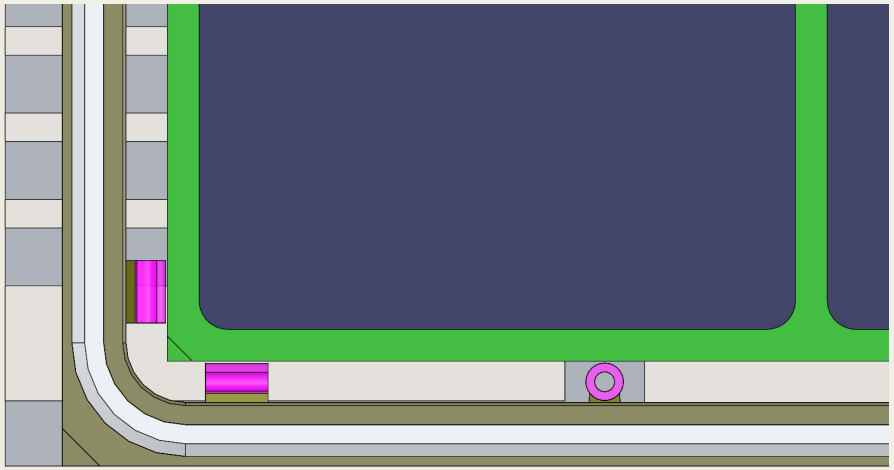

- Stack hold down
  - Wire thread through corner tubes and over the top grid spacer corner detent.
  - Wire self-secured with a twist or spot welds
- HV Contacts
  - Wire or shim bent into “C” spring below tubes and contacts HV pads
  - Above the tube, spot welded to contact shim
- Getter Mounting
  - Additional tubes over the signal strips (not shown)
  - Spot weld getters to shim stock
  - Lash shim to tubes

Schott G018-223 Frit Material Issue

- After 380°C vacuum bake of tile base, frit had a blackened, iridescent appearance with popped surface bubbles
- Schott G018-223 frit: Lead containing, softening temp of 360°C → Remelted, possibly reducing lead oxide in glass
- Silver strips not electrically compromised (no inter-strip shorts, strip resistance unchanged)

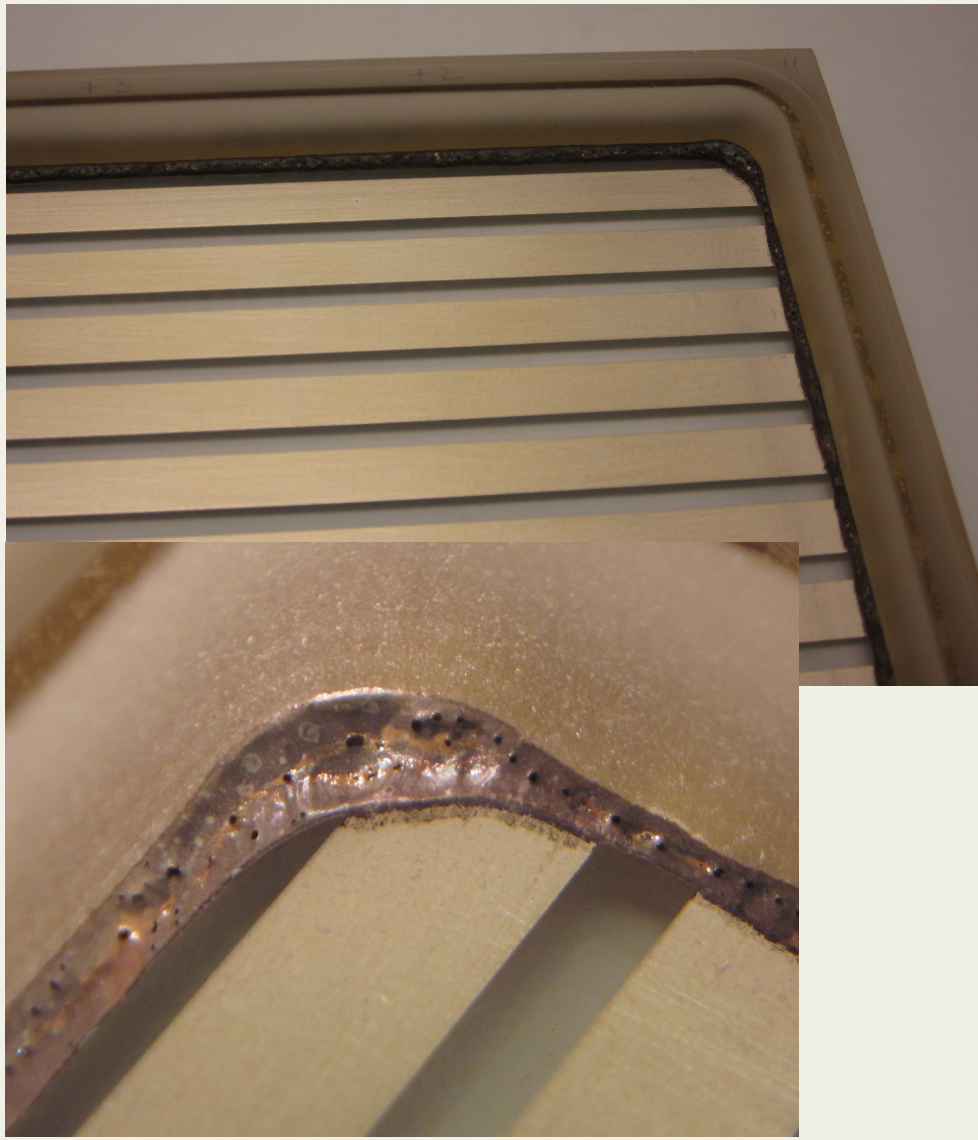

Frit Material Investigation

- Investigation initiated at ANL to test G018-223 frit sample to increasing vacuum bake temps to find the critical temperature at which deterioration occurs
- New, higher melting temperature frits from AGC and Schott have been ordered for evaluation
- High temperature air bake performed on silver screened anode
  - Temperature appropriate for new frits
  - Surface changes noted in silver (bubbling or crystallization)
  - Seems mechanically and electrically sound

Indium Seal Tests

- First test performed with square cross-section indium groove
  - Poor penetration of NiCr and Cu into the depths of the groove, resulting in thin layers on the groove walls (<100nm)
  - Indium wet nicely on initial melt, but scavenged the Cu during high temp vacuum bake and exposed bare groove wall

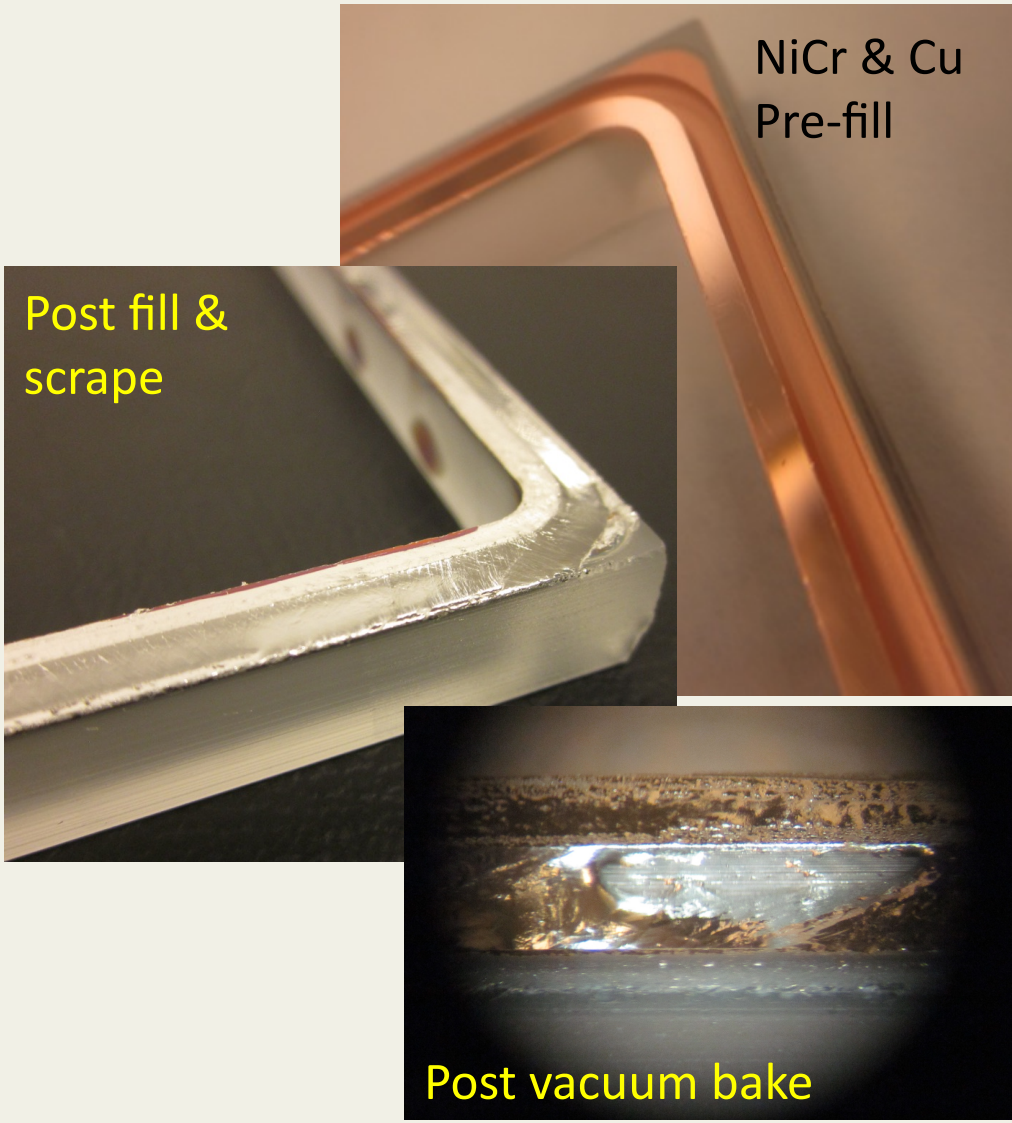

Indium Seal Tests

- For second test groove and evaporation geometry modified
  - Round bottomed groove
  - Evaporation boat offset to lie under groove at one rotation extreme
  - Much improved groove coverage
  - Good indium wetting when filled
  - Some “fizz” and minor de-wetting after vacuum bake
  - Much improved with remelt and scrape

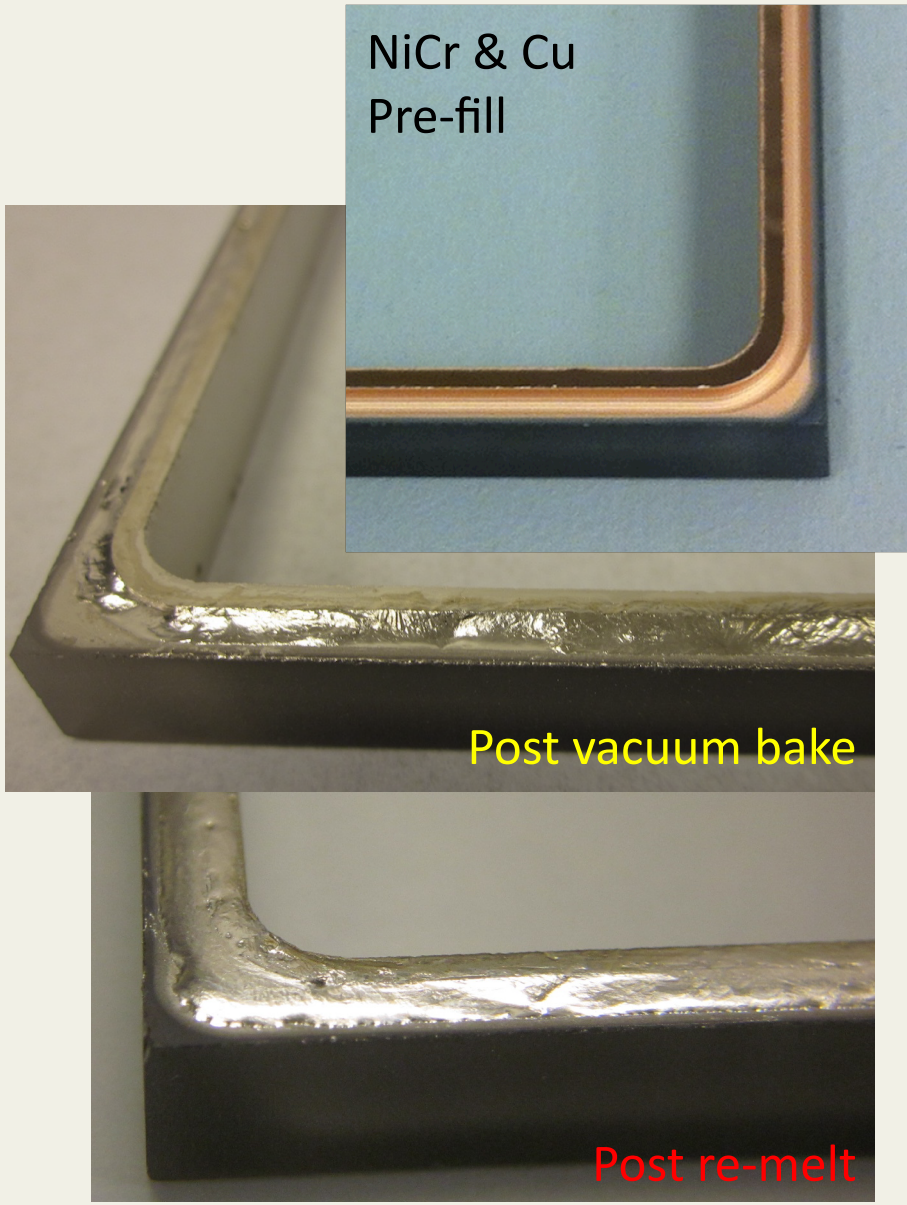

Indium Seal Tests

- Chamber leak while at 350°C → indium oxidized badly (as did our tank and tooling)
- Air melt and scrape off oxide recovered indium (looked remarkably good, actually)
- Reloaded into chamber
- Seal performed at 150°C (to avoid oxidation of indium from oxidized chamber)

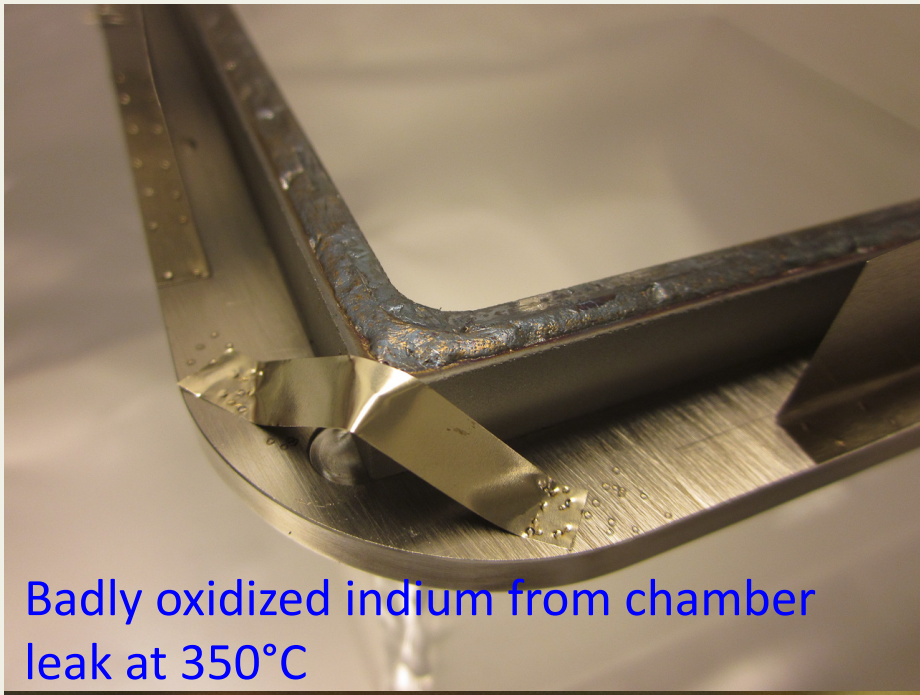

Badly oxidized indium from chamber leak at 350°C

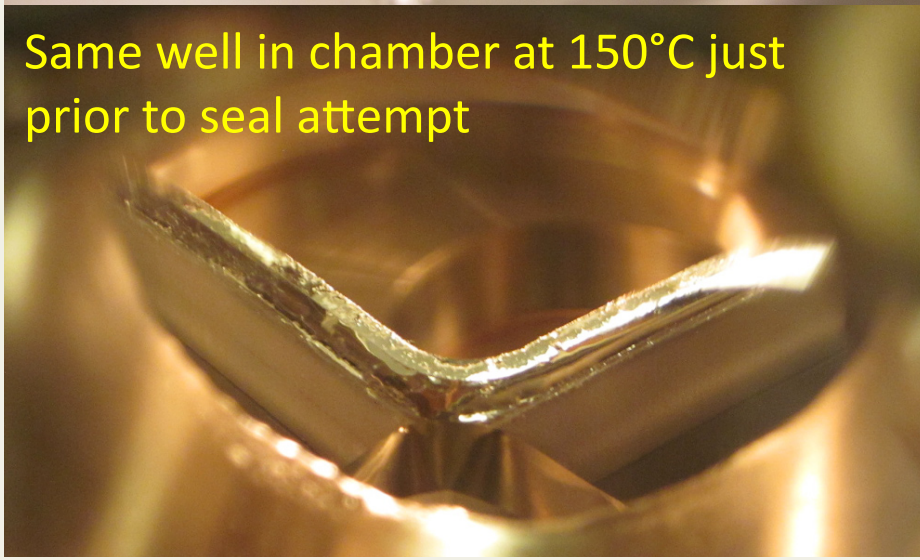

Same well in chamber at 150°C just prior to seal attempt

Indium Seal Tests

- Good indium wetting to window everywhere except one corner where there is a visible gap (.002” x .5”)
- There is also a paucity of indium in that corner
- Two ideas on the cause of the gap (or both)
  - Warped window tooling (noted during build up) pulled the window out of flat
  - Not enough indium in the well to accommodate indium wetting onto the window

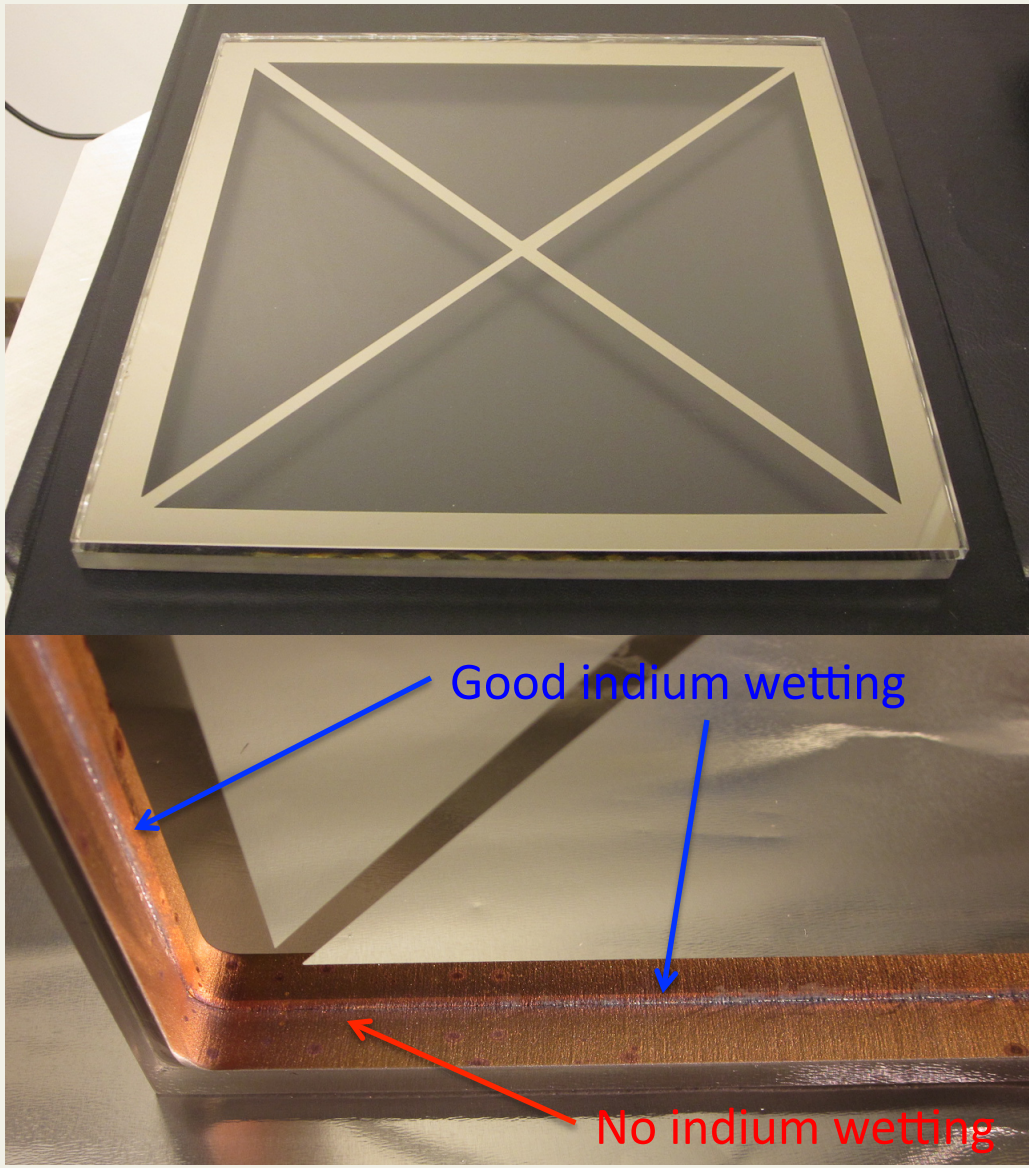

Next Steps on Indium Seal

- Perform metrology on window surface (is that corner high?)
  - If out of flatness, consider an unstressed remelt to achieve a seal
  - If not, seal some other way (goop, epoxy, more indium)
- Epoxy bottom to a stiffener frame to test the strength of the sidewall and seal in a "tile-like" mechanically constrained state.
- Modify groove design for less relief on outside wall
  - More indium fill volume, less indium runout area
  - More indium available for window wetting
- Fix warped tooling
- Perform several iterations of this seal test

Next Steps on Glass Package

- Design is finalized enough to begin procurement of piece parts
- Need to perform several more iterations on the seal test to finalize the groove design and qualify the robustness of the sidewall
- Design modifications to existing process tooling at UCB to accommodate the glass package (these are relatively modest)

BACKUP SLIDES

Schott B33 Stock Thicknesses, Tolerances, and Potential Uses

Thickness	*Tolerance*
0.70	0.07
1.10	0.10
1.75	0.10
2.00	**0.20**
2.25	0.20
2.75	0.20
3.30	0.20
3.80	0.20
5.00	0.20
5.50	**0.20**
6.50	**0.20**
7.50	**0.30**

Thickness	*Tolerance*
8.00	0.30
9.00	0.30
11.00	0.30
13.00	0.50
15.00	0.50
16.00	0.50
18.00	0.50
19.00	0.50
20.00	0.70
21.00	0.70
25.40	1.00

Grid Spacer Window Sidewall

Internal Stack-Up with Tolerances

Well Defined Items (Upper Internal Stack)					
Item	*Qty/Assy*	*Thick. Ea*	*Tol. Ea*	*Thick. Assy*	*Tol. Assy*
MCP	2	1.20	0.10	2.40	0.20
GS-2.0	2	2.00	0.20	4.00	0.40
Contact	4	0.05	0.00	0.20	0.00
Upper Int. Stack				6.60	0.60

Frit Bondline Thickness	
Thick.	*Tol.*
0.15	0.03

Goal: At least a 4mm anode gap, preferably larger.

Sidewall Options and Resultant Anode Gaps					
Item	*Thick.*	*Tol.*	*Nom Gap*	*Min Gap*	*Max Gap*
9 mm sidewall	9.00	0.30	2.55	1.63	3.48
11 mm sidewall	11.00	0.30	4.55	3.63	5.48
13 mm sidewall	13.00	0.30	6.55	5.63	7.48

Comments: The 9 mm sidewall results in a anode gap that is far too thin. The 11 mm results in an acceptable gap, but the 13 mm sidewall yields nominal, minimum, and maximum gaps that are all close to stock B33 thicknesses.

Window & Anode Diaphragming

2.75 mm window & anode

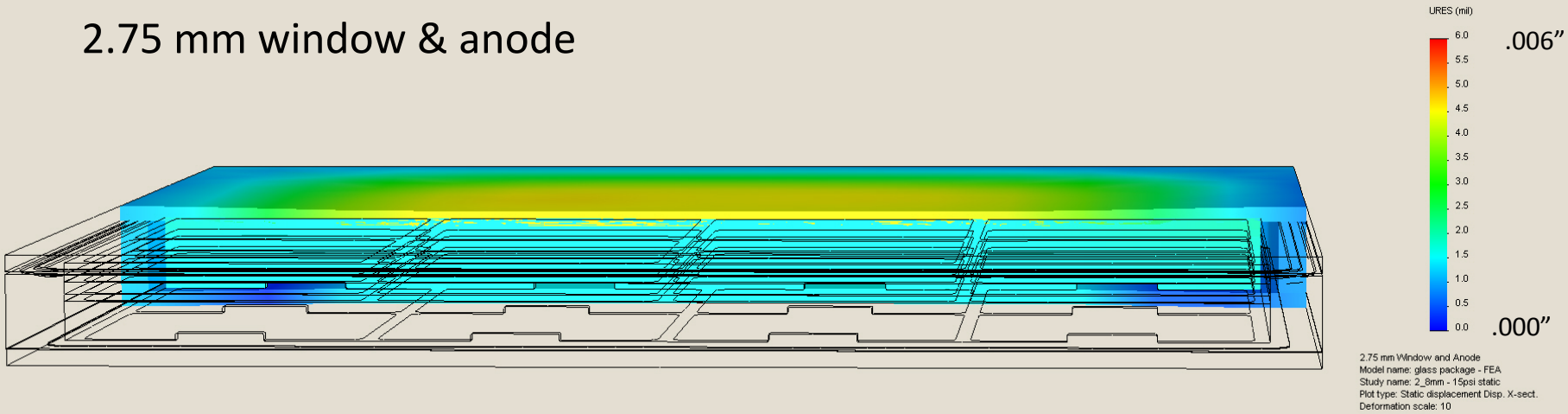

3.30 mm window & anode

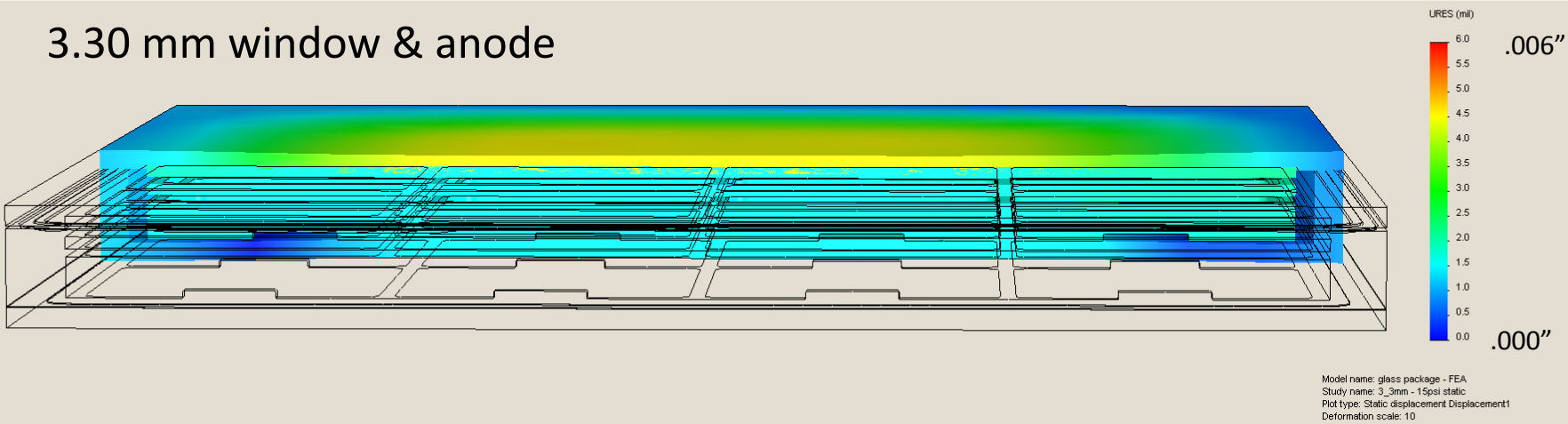

Window & Anode Diaphragming

3.80 mm window & anode

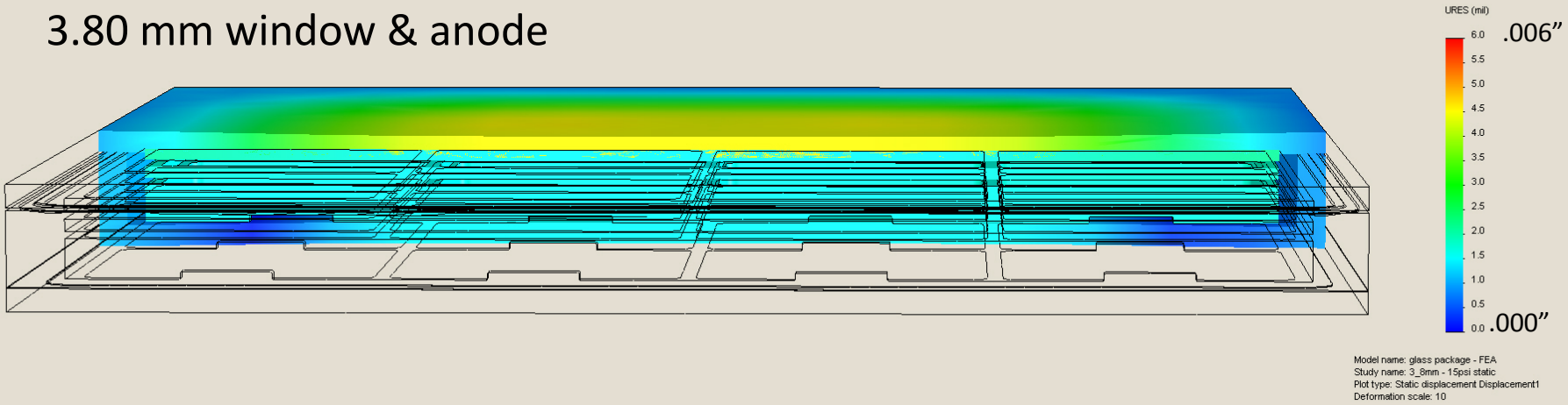

5.00 mm window & anode

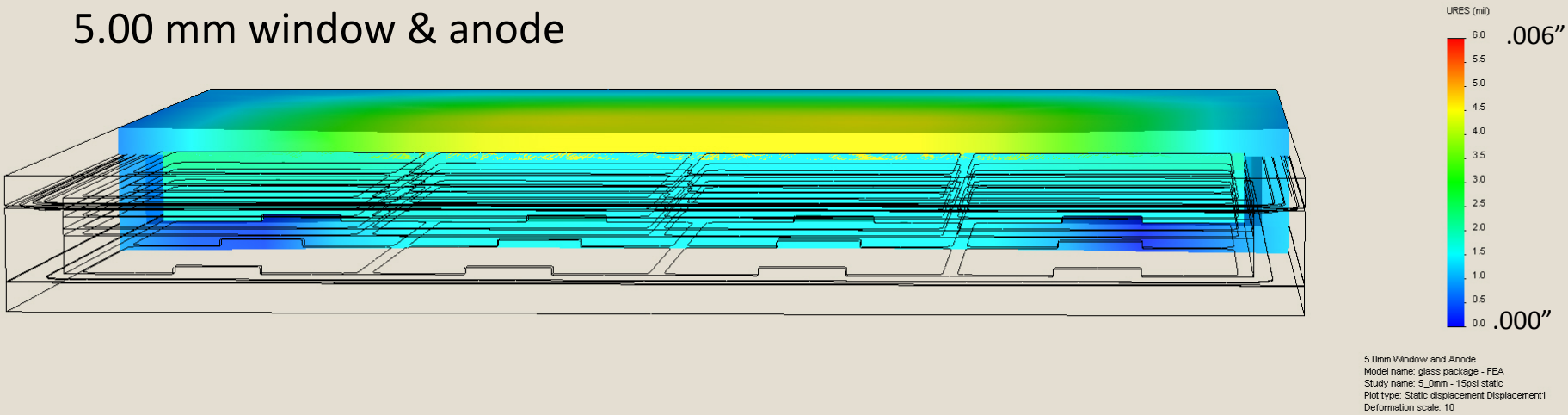

Factor of Safety
Material Strength / Induced Stress

2.75 mm window & anode

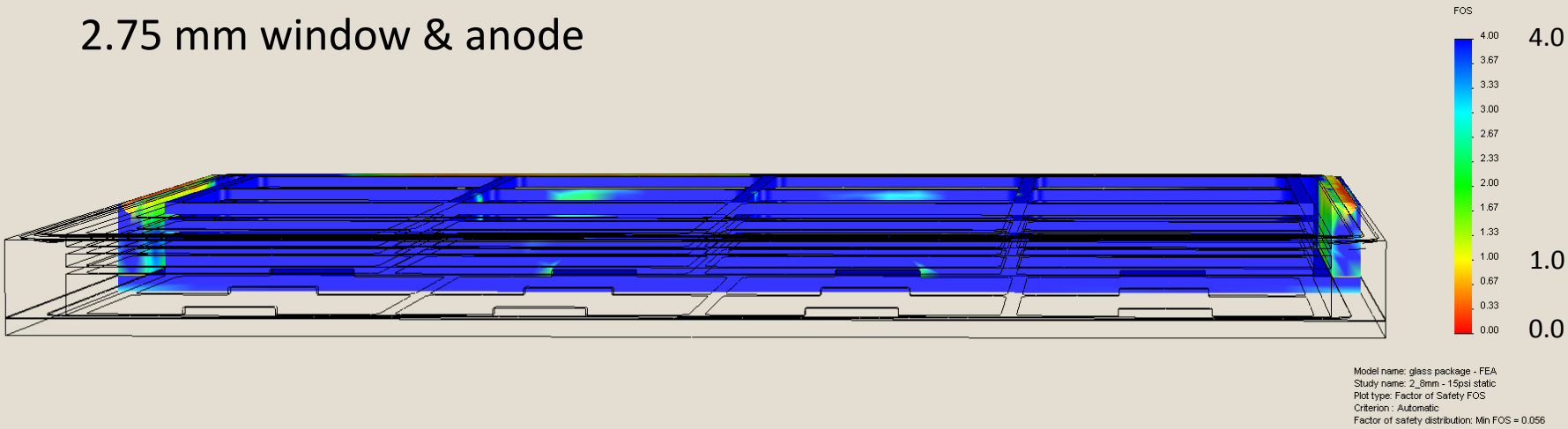

3.30 mm window & anode

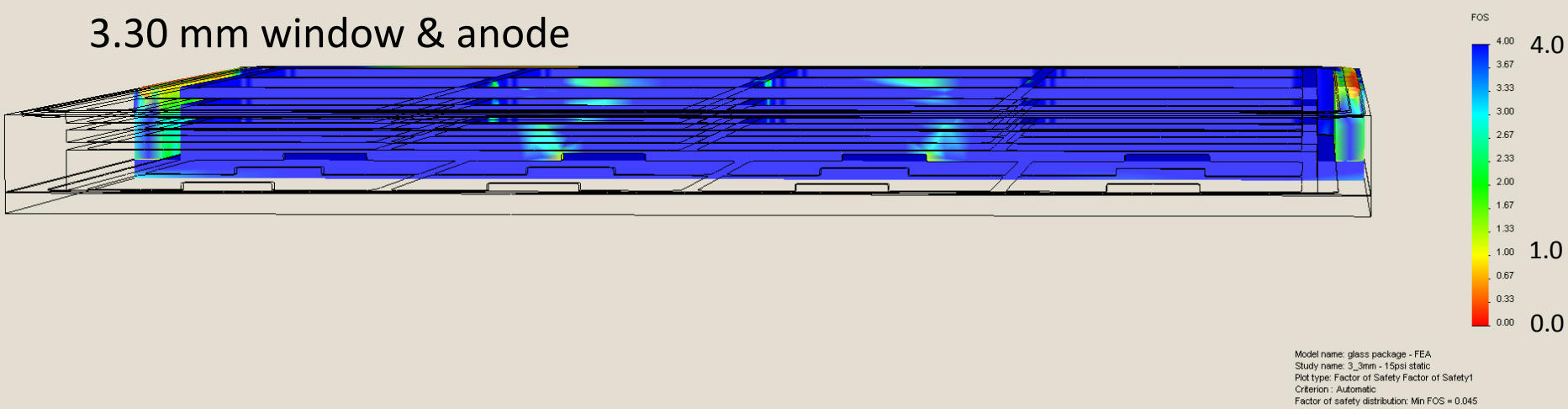

Factor of Safety
Material Strength / Induced Stress

3.80 mm window & anode

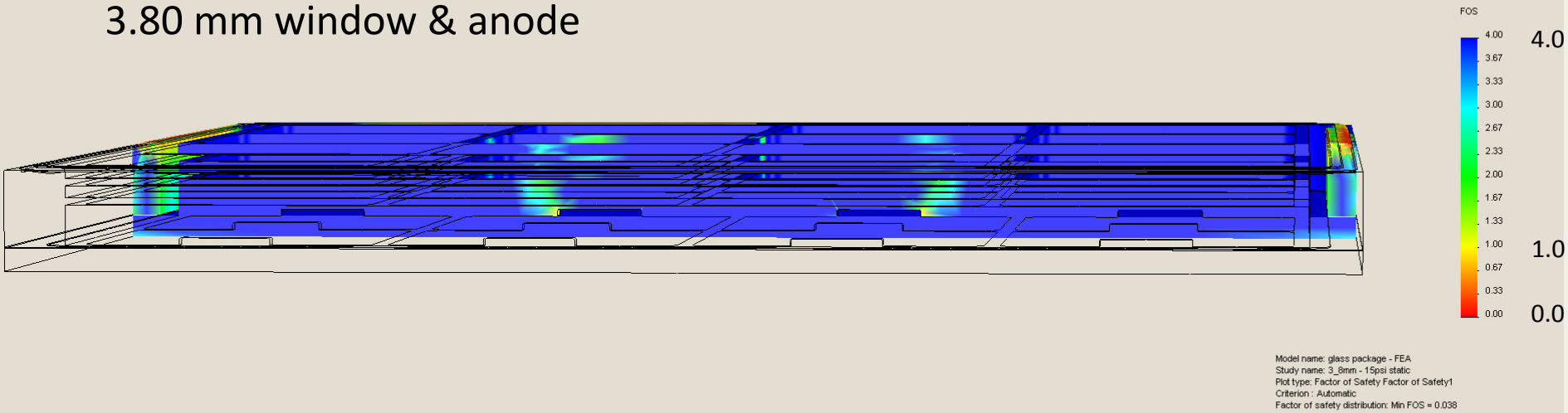

5.00 mm window & anode

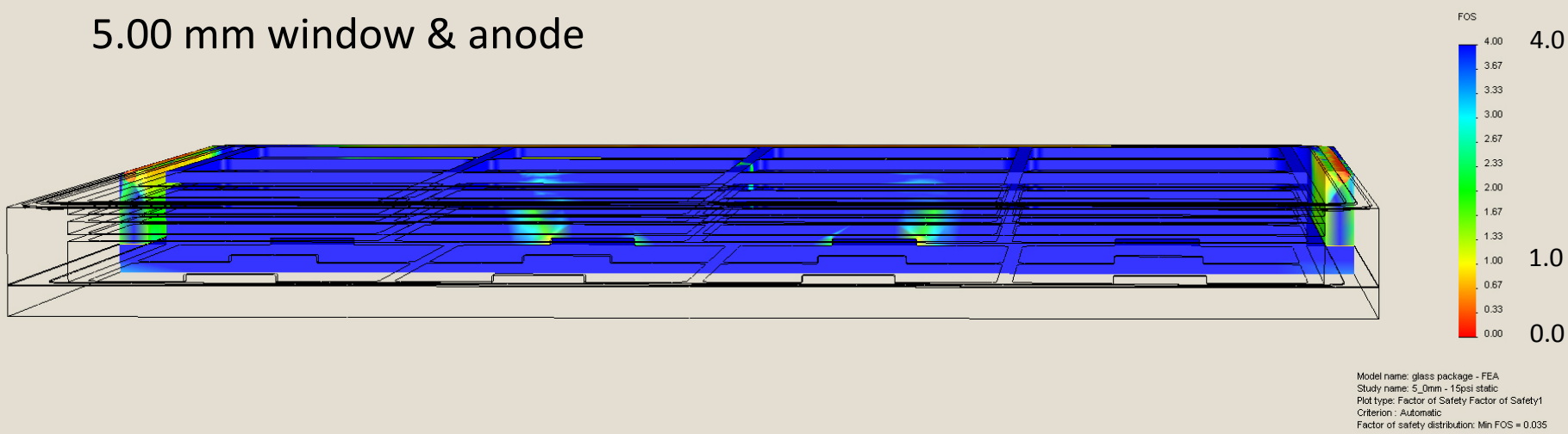

Factor of Safety
Detailed View at Wall

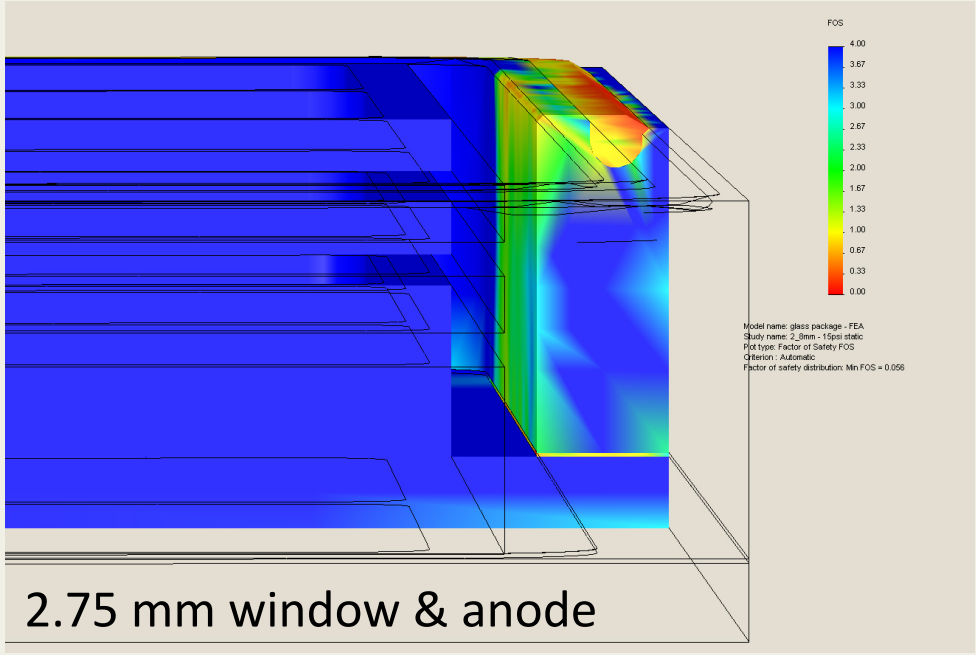

2.75 mm window & anode

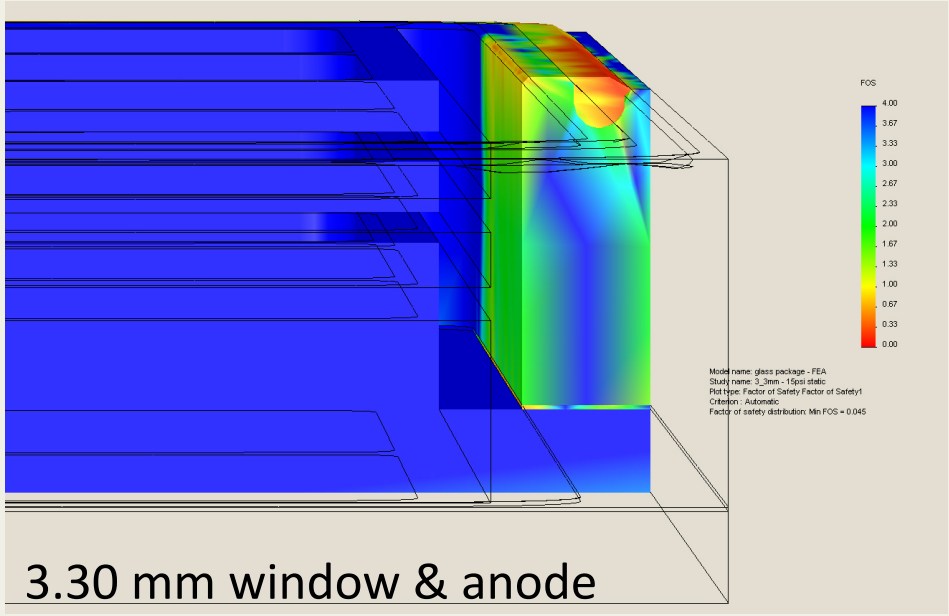

3.30 mm window & anode

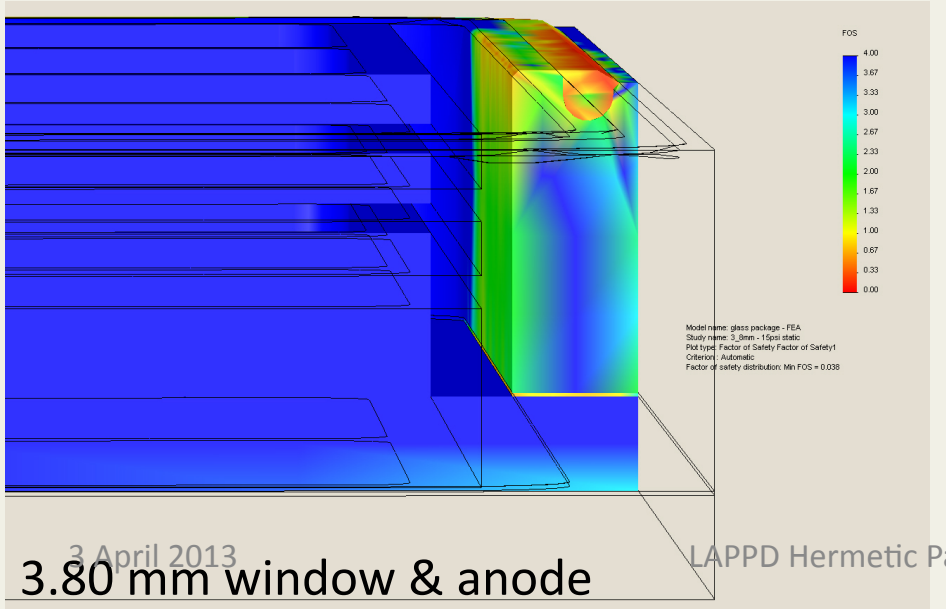

3.80 mm window & anode

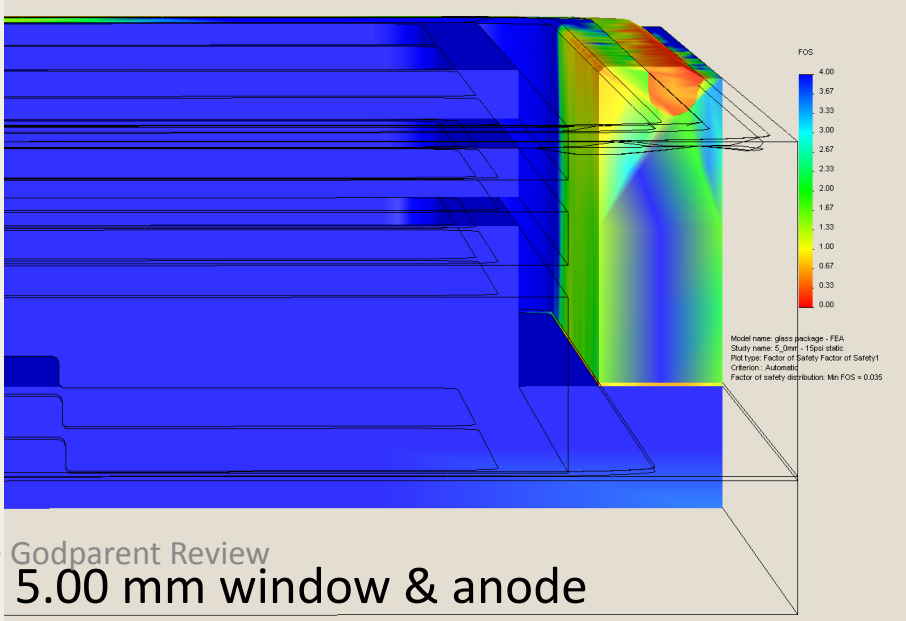

5.00 mm window & anode
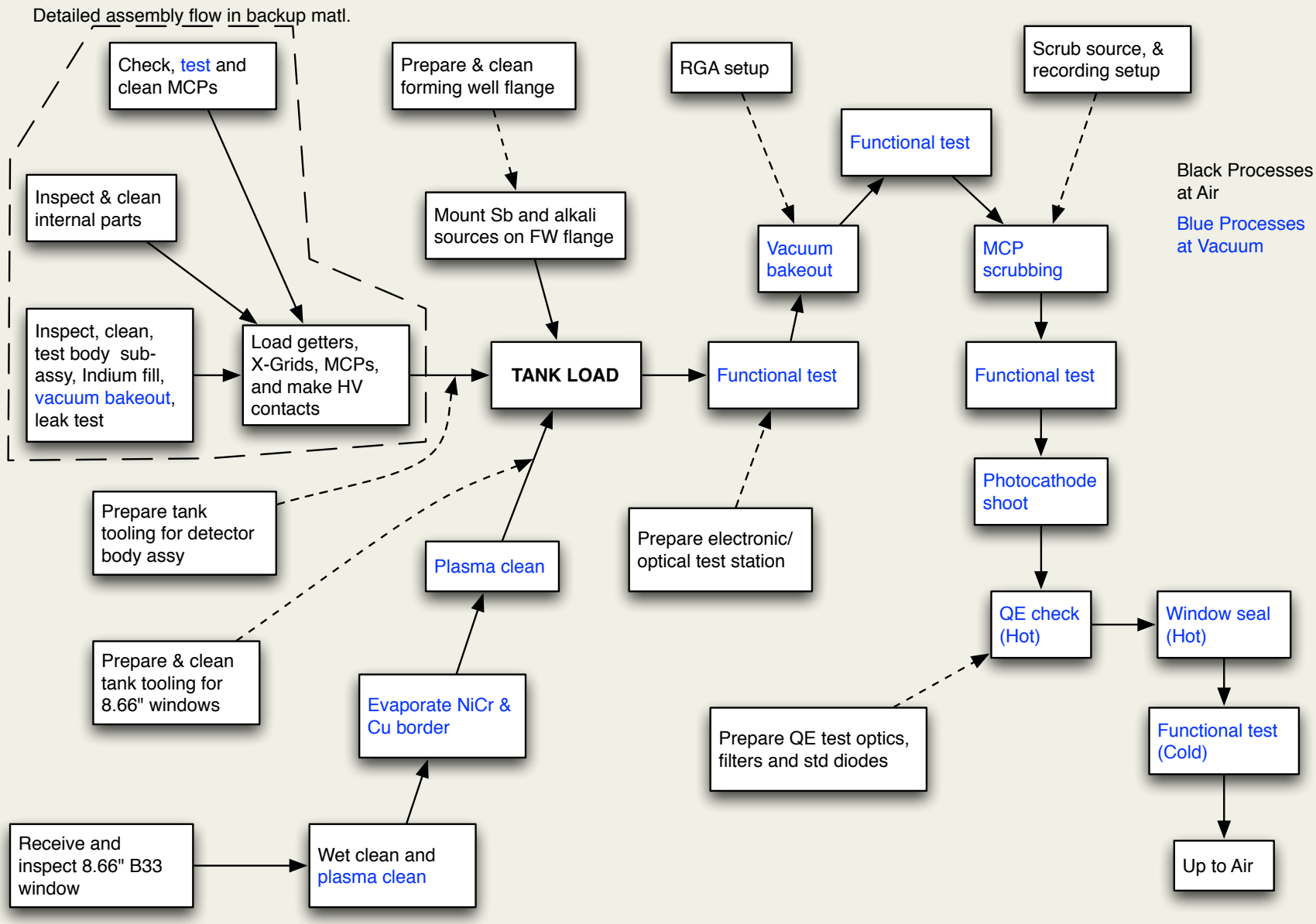
8” Tube Process Flow