LAr R&D Program at BNL

Outline

1. Overview of LAr R&D program at BNL
2. Experimental Setup
3. Recent results on longitudinal diffusion
4. Impurities model for LAr
5. Summary

Yichen Li

Oct 6th, 2015
CPAD Instrumentation Frontier Meeting 2015

BROOKHAVEN
NATIONAL LABORATORY

Overview: Large LAr TPC

Short-Baseline Neutrino (SBN) program and Deep Underground Neutrino Experiment (DUNE) with Liquid Argon Time Projection Chambers will address

- CP violation in the lepton sector
- Neutrino mass hierarchy
- Precision measurement of neutrinos
- Search for sterile neutrino(s)
- Proton decay
- Supernova neutrino detection

Characterizing the properties of LAr is very important for the design of the these detectors considering their high cost and long construction period

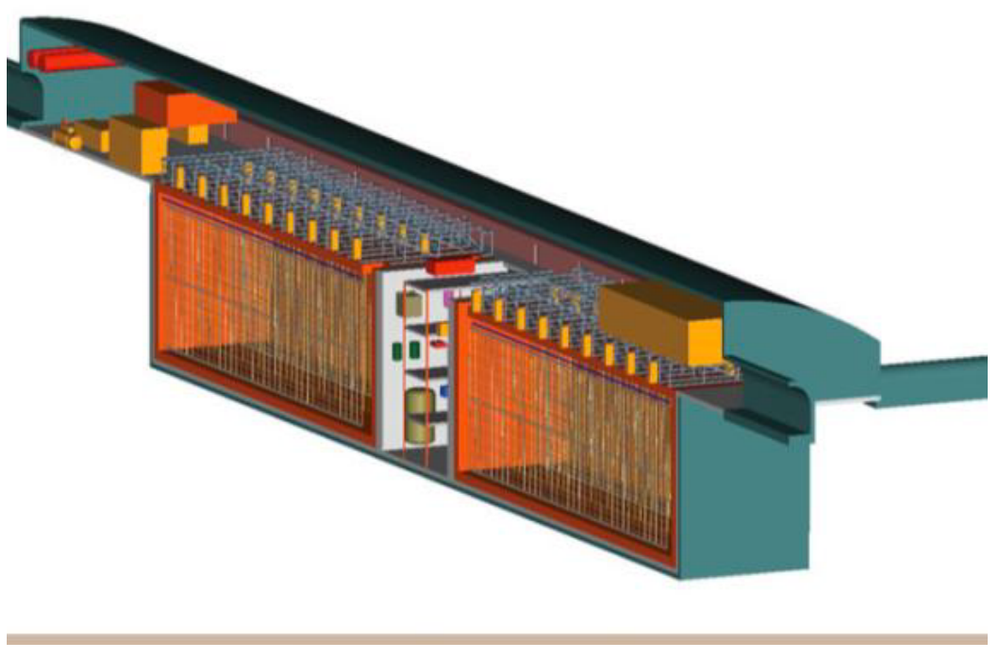

DUNE Single-Phase LAr TPC (40 kt)

Drift length = 3.7 m

The Principle of LArTPC
3D reconstruction

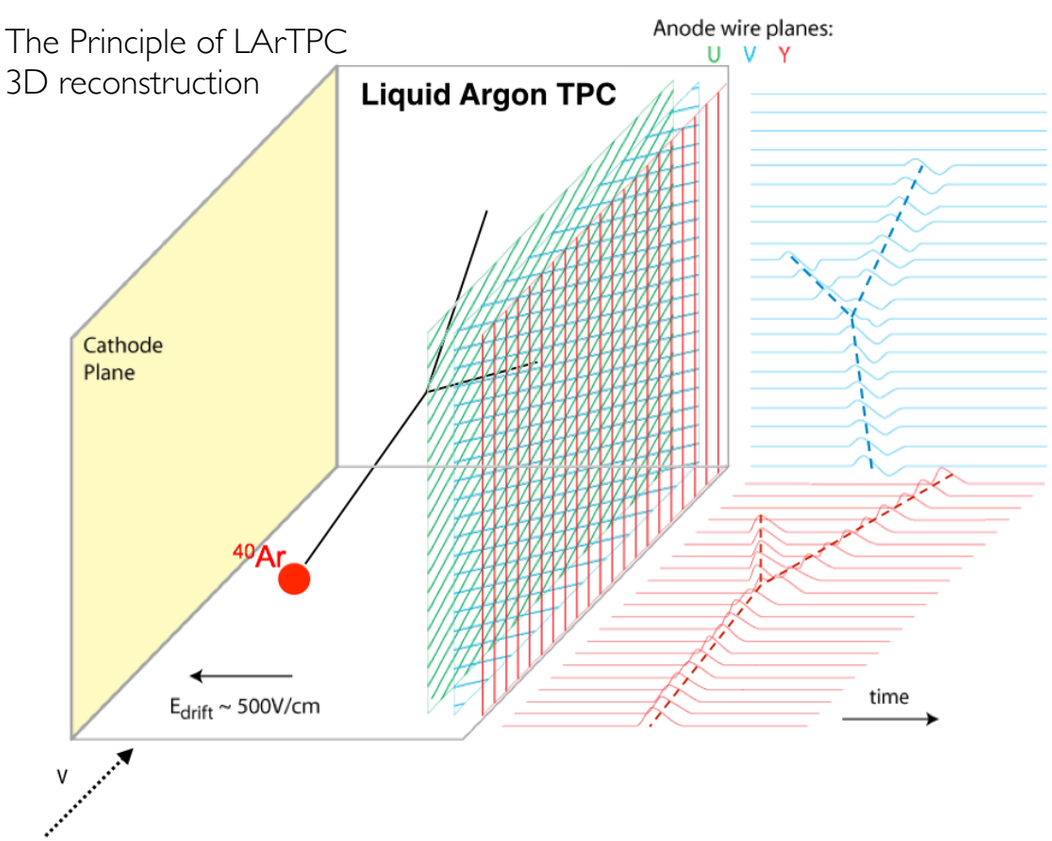

Overview: BNL LAr R&D Program

- A good knowledge of properties of LAr can help to design LArTPCs with better performance
- BNL has been carrying out a R&D program on study of LAr properties

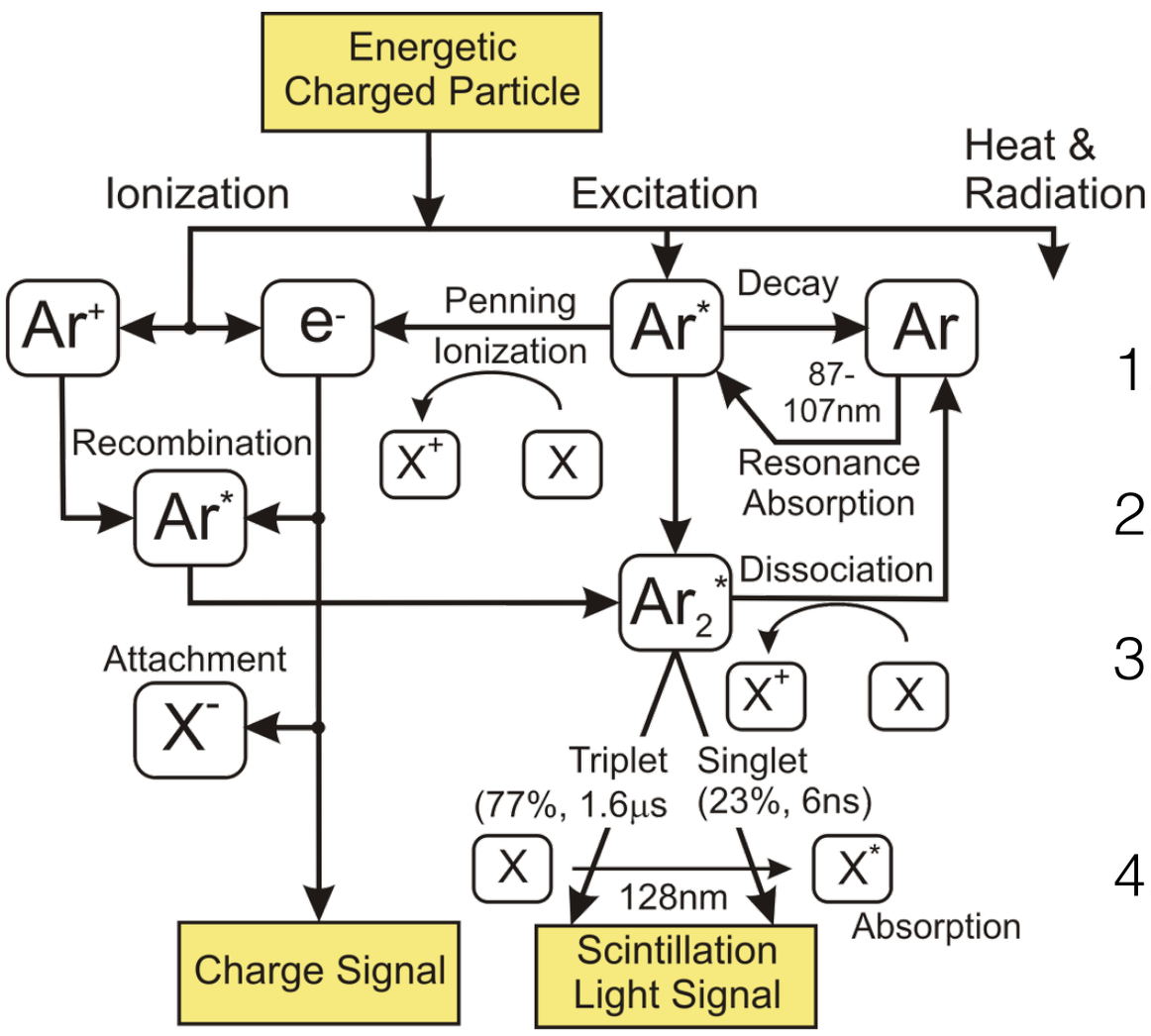

Physics Goals

1. Measure electron transport properties
2. Develop and verify purification kinetics models
3. Study impurity adsorption/desorption kinetics, partition kinetics, and transport
4. Measure electron attachment

Experimental Setup

- 2L test stand is cooled by LN_2+Dry ice bath and LAr is formed by liquefying purified commercial GAr
- 20L test stand is an upgraded and improved apparatus with LAr circulation and GAr purification
- The 800L test stand for demonstration of primary gas purification for LArTPC is currently under construction

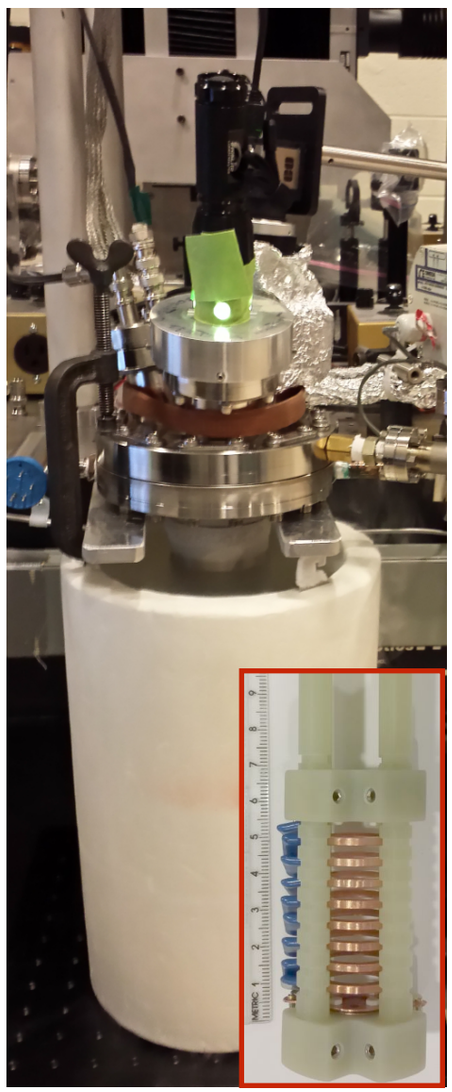

2 L Test Stand

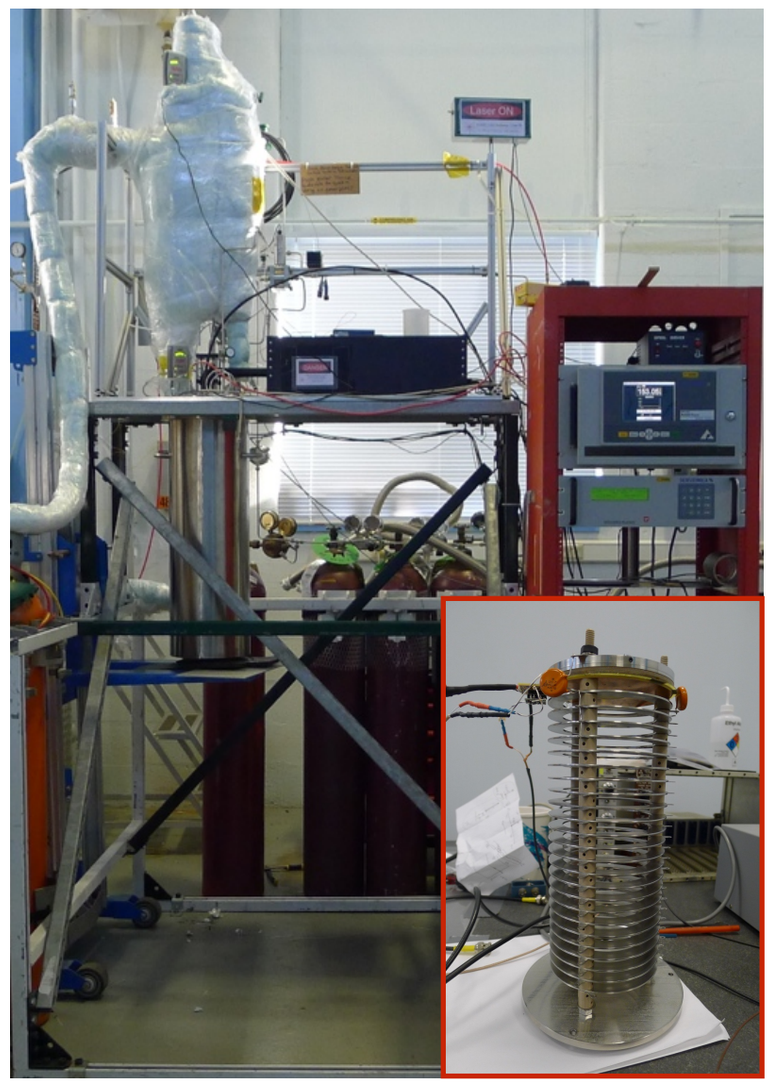

20 L Test Stand

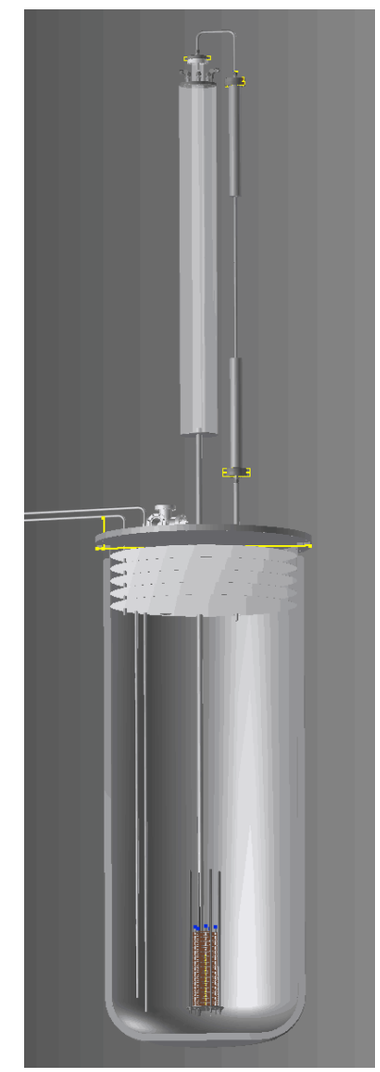

800 L Test Stand

2L Test Stand: Diffusion of Electrons Drifting in LAr

- Knowing electron diffusion after drift distance is crucial for understanding track resolution.
- Diffusion of electrons in strong electric fields is not isotropic.
- Drift velocity is measured by a time-of-flight method.
- Diffusion is measured by the signal rise time and interpreted by the electron energy

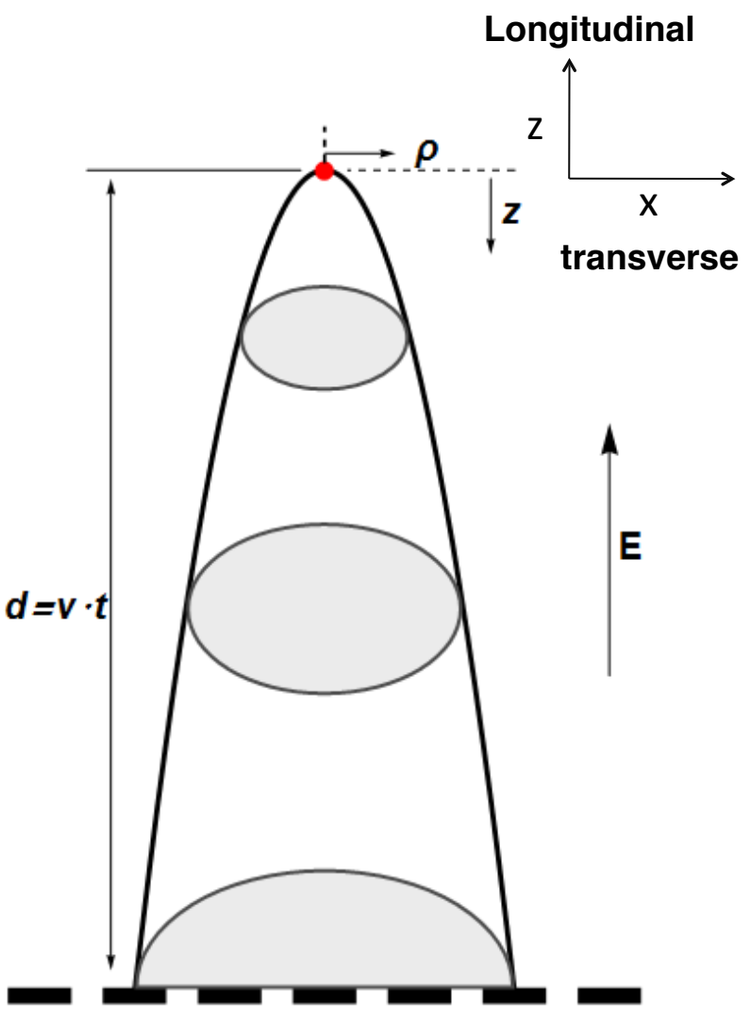

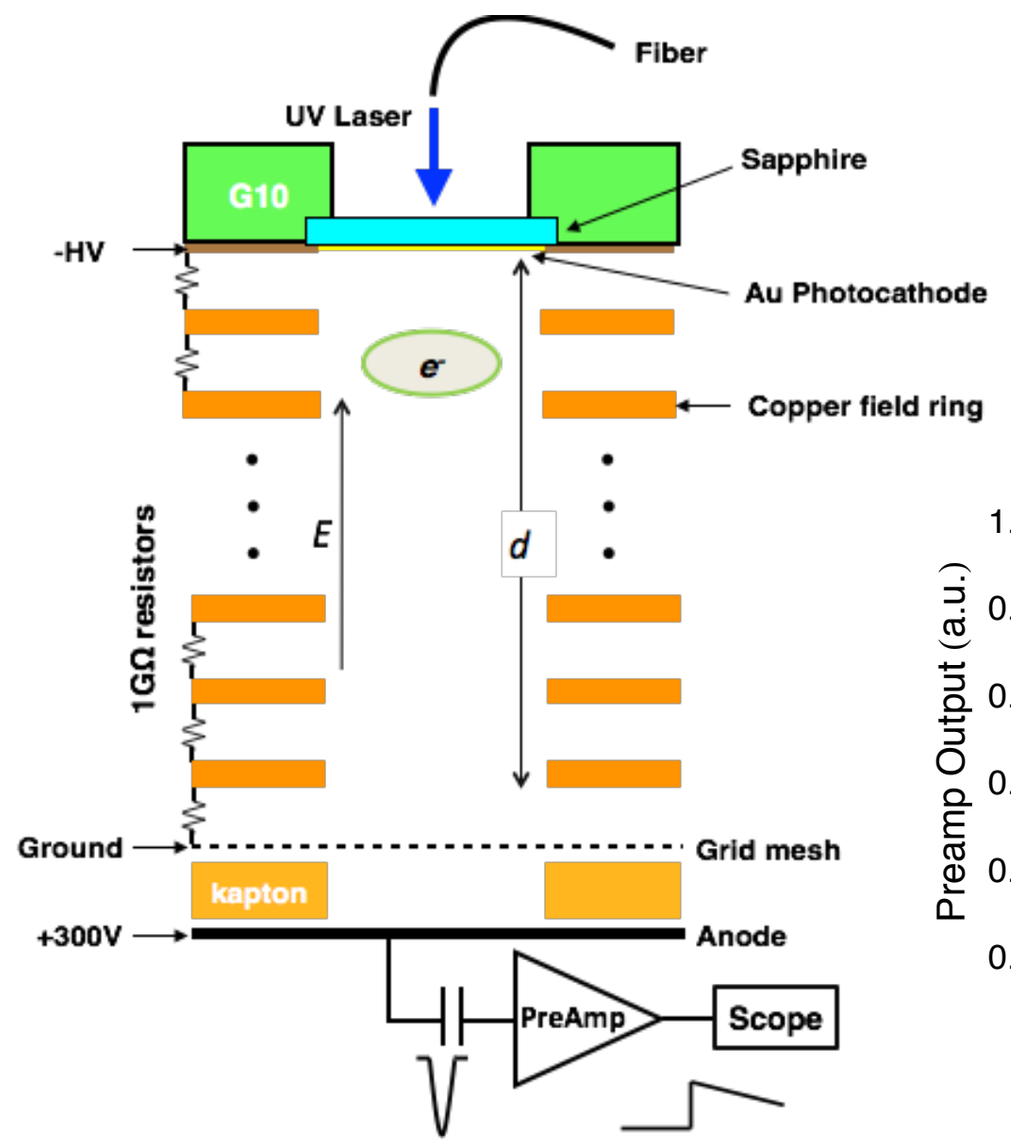

$$k_B T = \varepsilon_e = \frac{eD}{\mu}$$

Simulated charge signal with drift offset removed

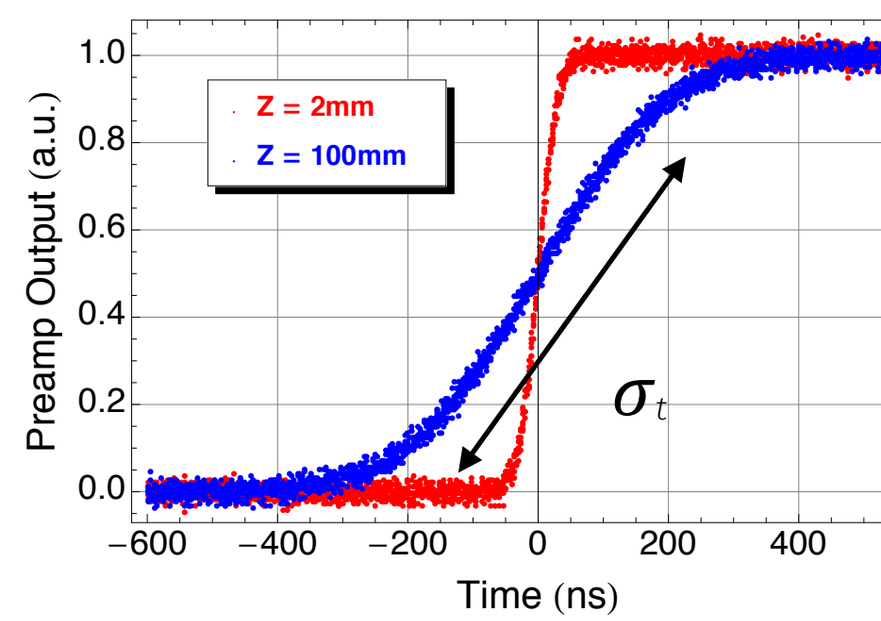

2L Test Stand: Raw Signal

- The anode charge signal is recorded with a digital oscilloscope for a set of high voltages and drift distances. It can be seen clearly on the plot that drift (rising edge position) and diffusion (slope of rising edge).

- The raw signal is fitted by a convolution of a Gaussian function containing the information of the electron swarm and a step response function with damping representing the response of the pre-amplifier.

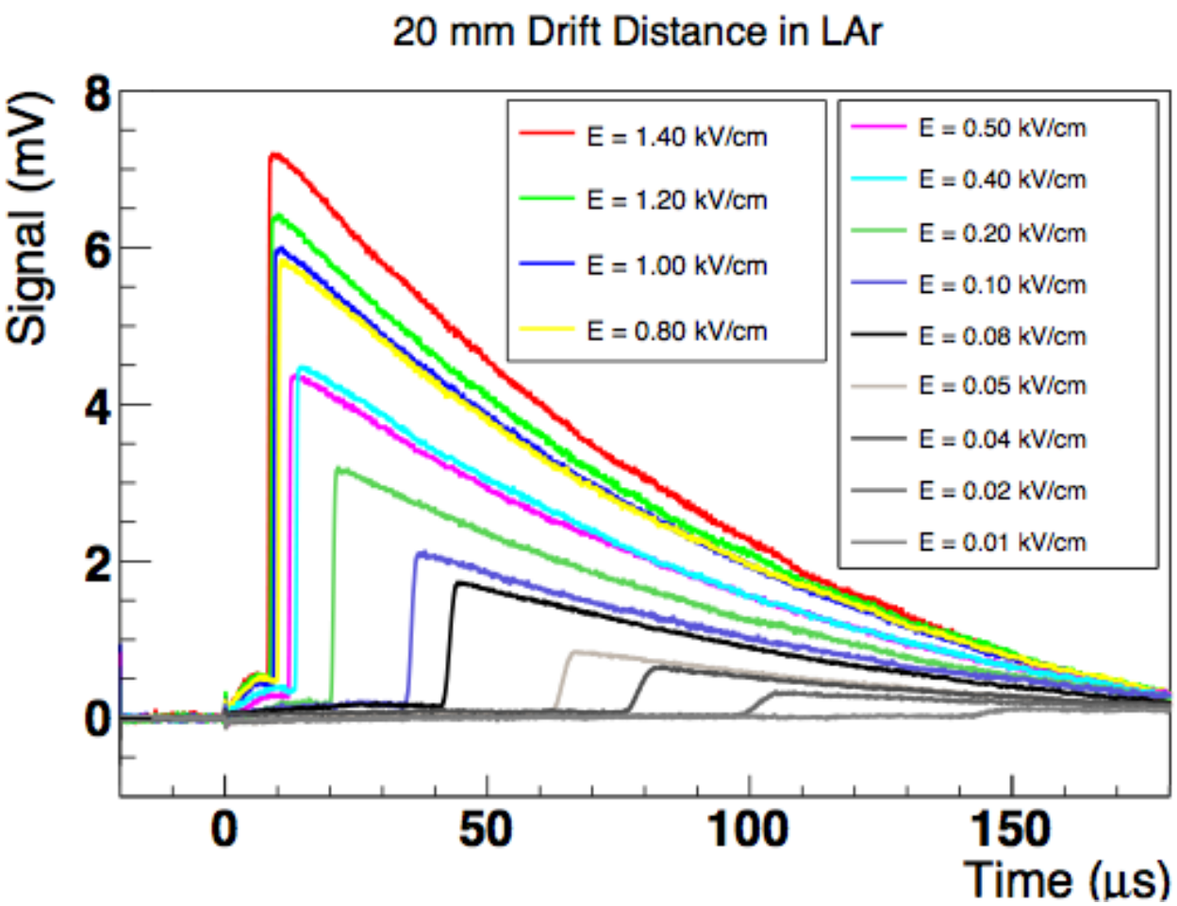

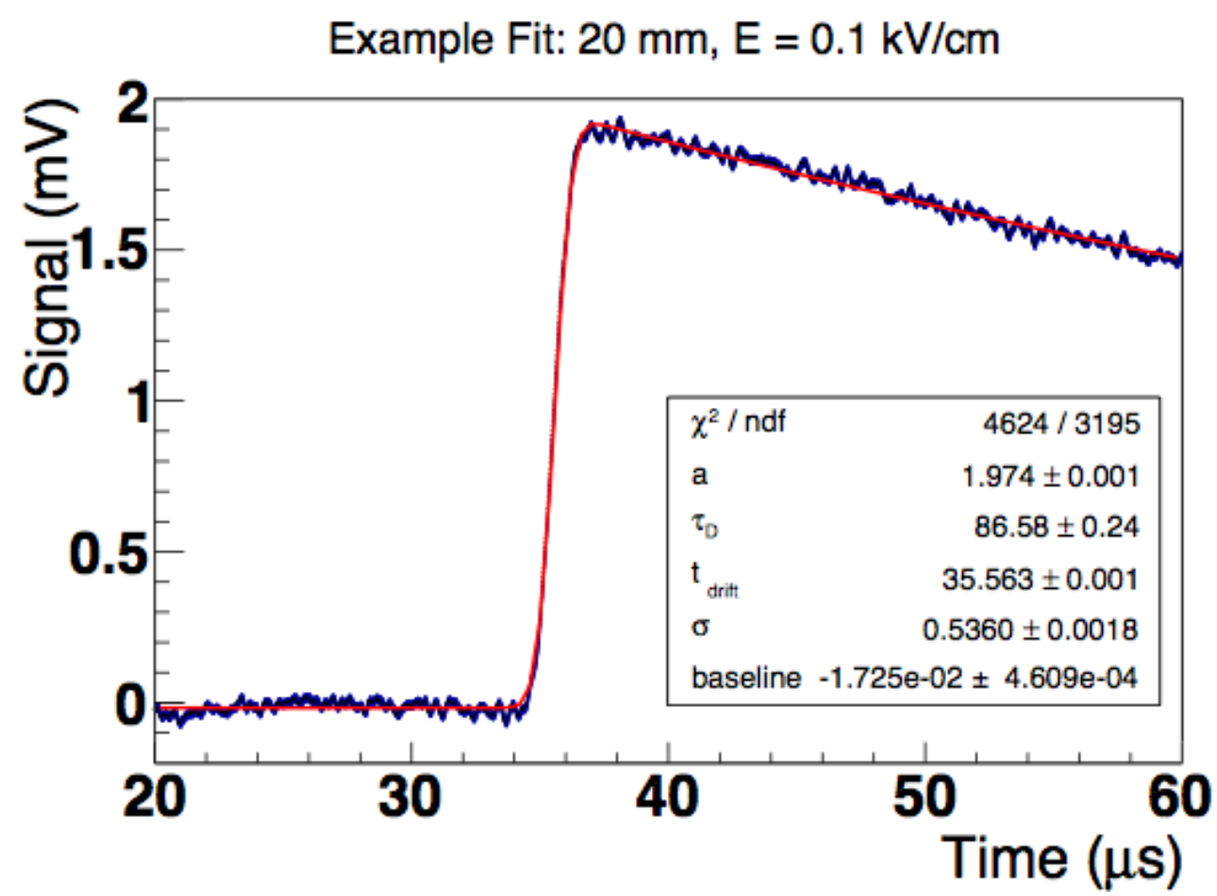

2L Test Stand: Systematics

The systematic uncertainties are mainly attributed to several sources:

- Electronics response time (measured)
- Additional drifting distance between the grid mesh
- The tightly focused bundle of trajectories lead to a spreading of the drift times
- Field leakage through the grid mesh
- Fluctuation of LAr temperature

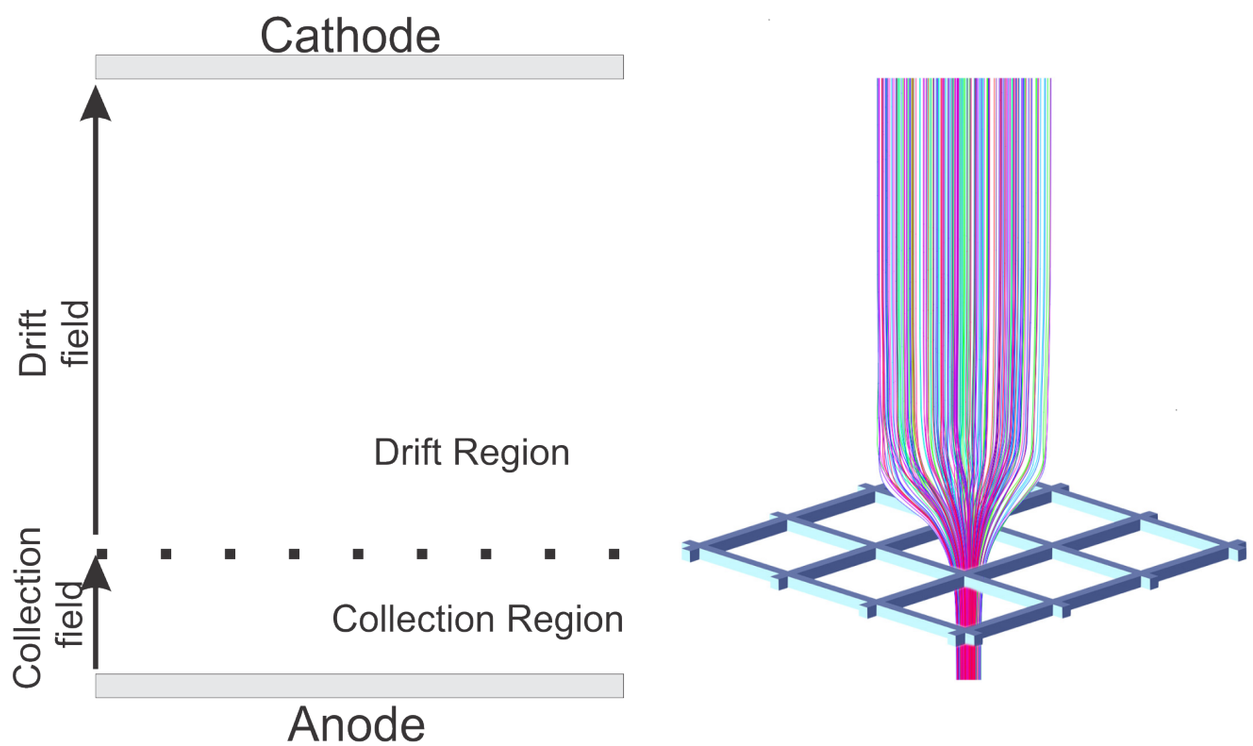

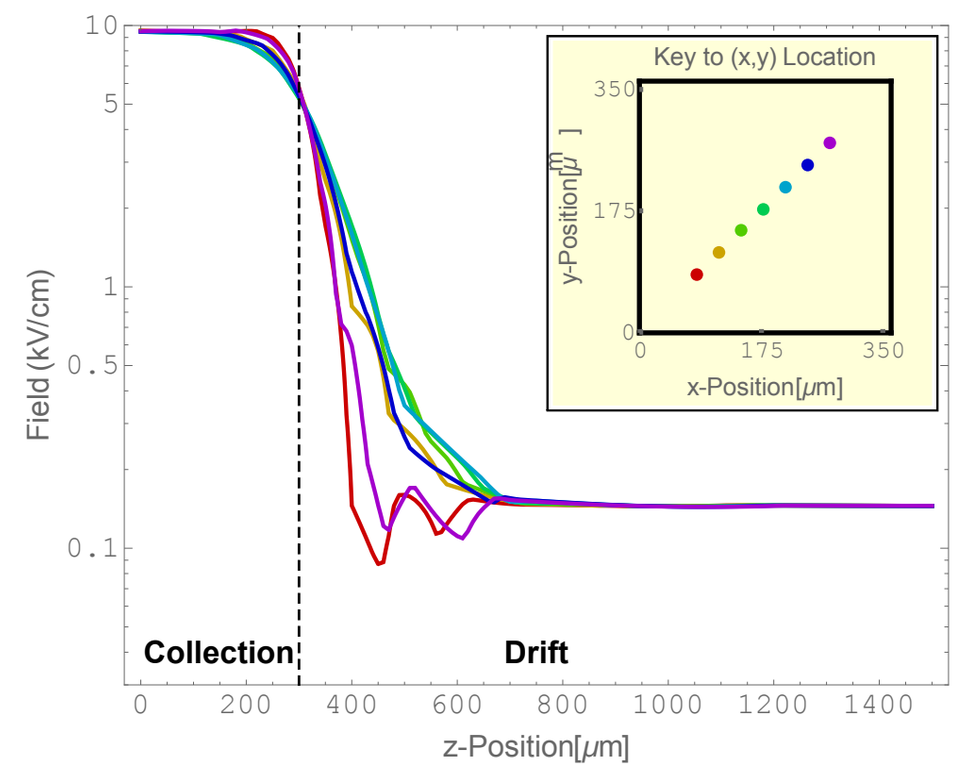

The systematic errors have been reduced for 20L test stand drift stack with finer mesh and better thermal stability

2L Test Stand: Electron Drift Velocity in LAr and GAr

- Our results agree with the global fit of previous measurements.
- Mobility at low fields is dominated by the field leakage effect for LAr, so we only report the diffusion > 0.1 kV/cm

$$v = \frac{d}{t} = \mu \cdot E$$

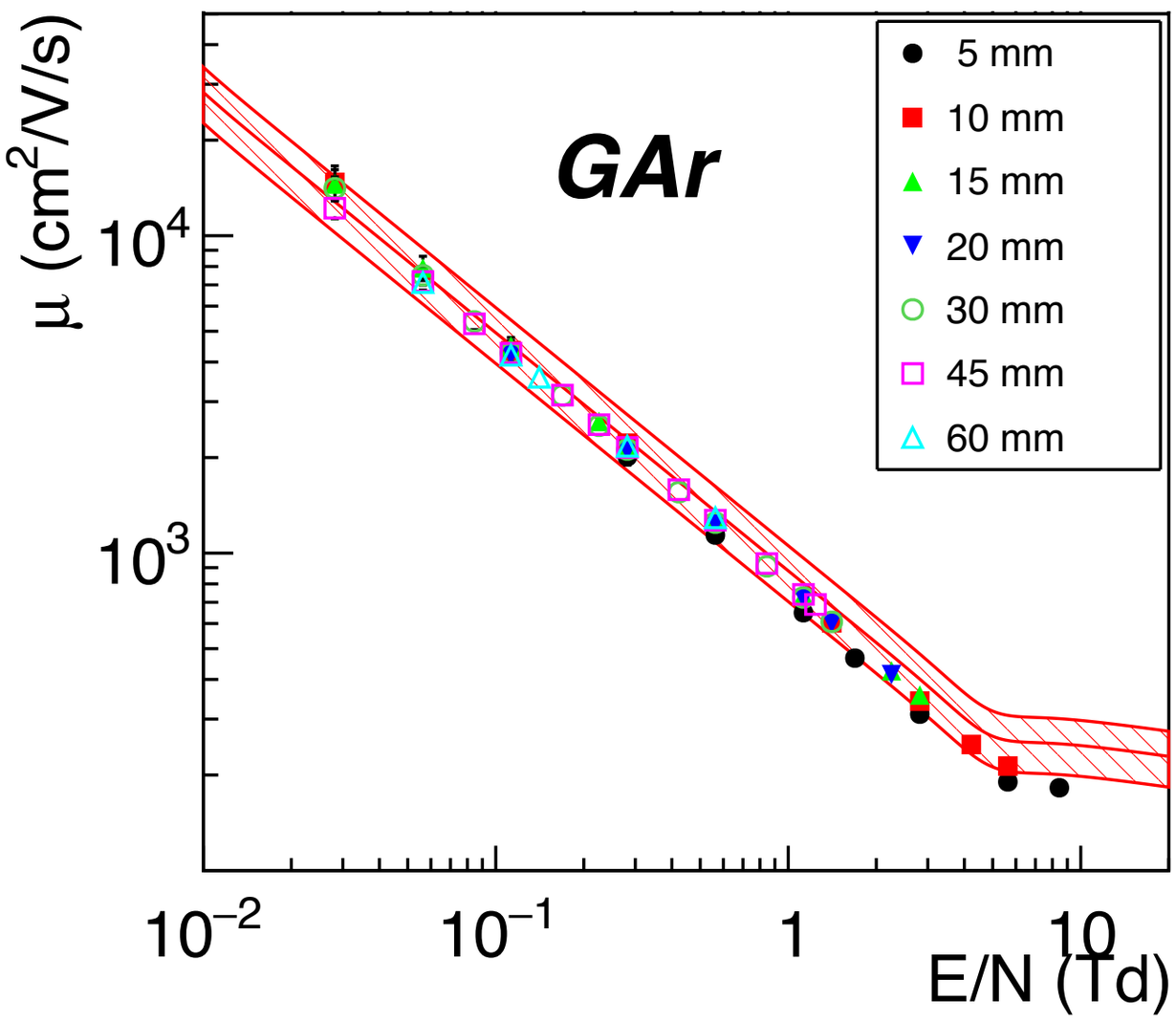

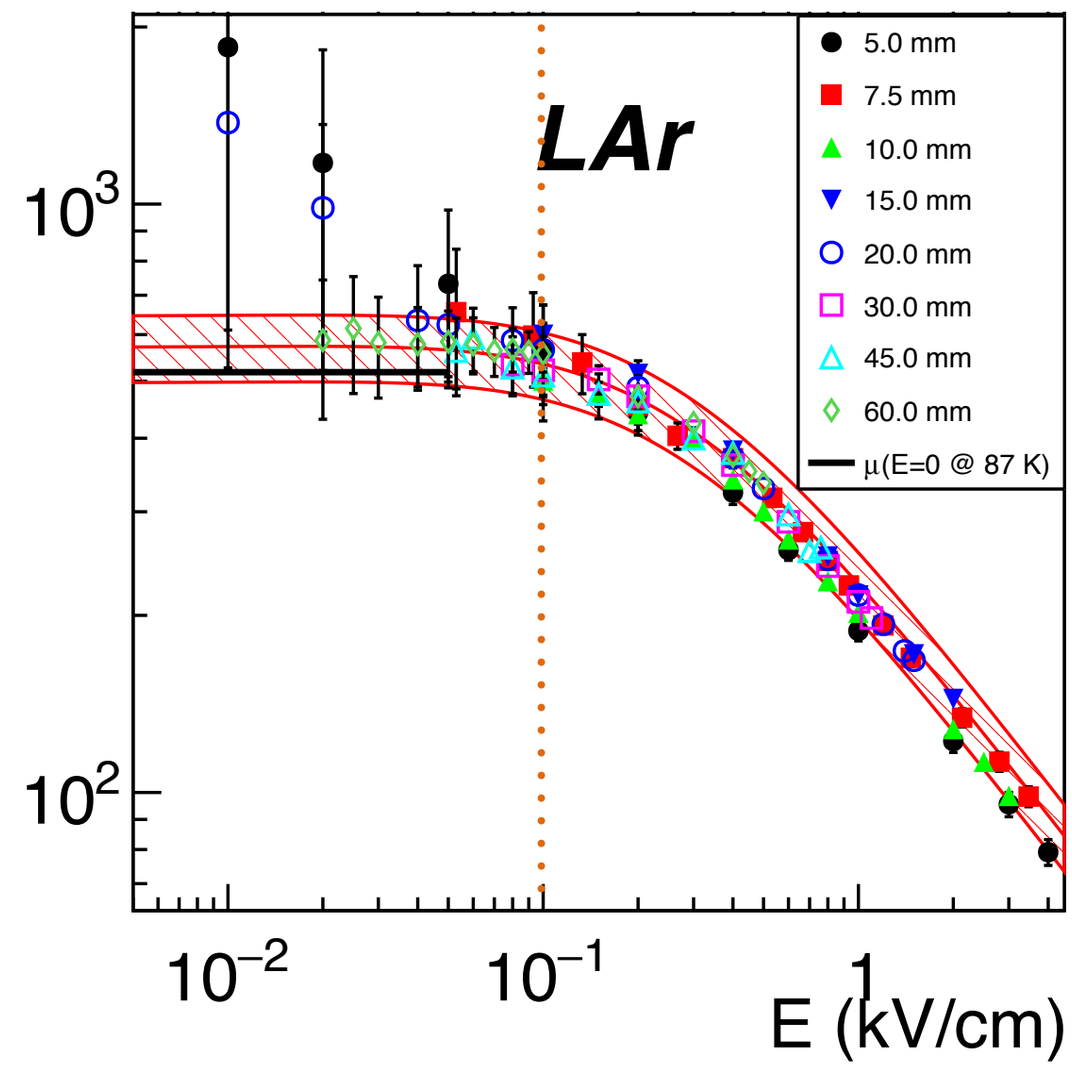

2L Test Stand: Electron Energy

- Our results agrees with previous results from ICARUS
- Our results are systematically higher than the calculation of Atrazhev et al.
- Details can be found in our paper on arXiv: 1508.07059 (submitted to NIM A)

- We are limited by the systematic uncertainties —> 20 L Test Stand

$$D = \frac{\mu k_B T}{e} = \frac{v}{Ee} k_B T$$

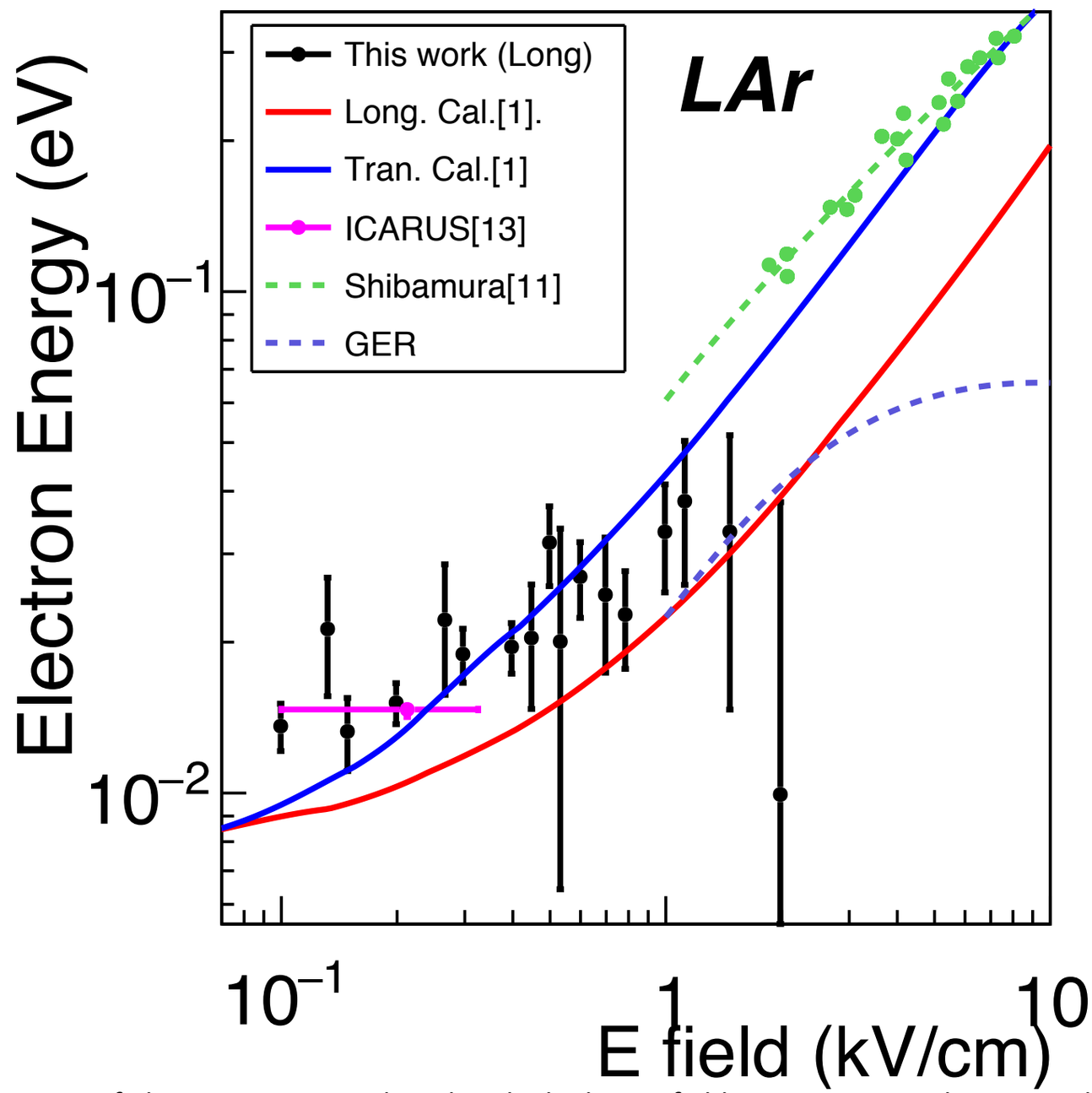

Ref: Atrazhev, V.M. and I.V. Timoshkin, Transport of electrons in atomic liquids in high electric fields, IEEE Trans. Dielectrics and Electrical Insulation

20L Test Stand

- The 20L test stand is constructed for improved measurement
  - Au photocathode illuminated by pulsed UV laser is used as electron source
  - The pre-amplifier is integrated with the anode immersed in LAr
  - Finer grid mesh
- Ultra high purity has been achieved with gas purification only, better thermal stability than 2L test stand
- The same design has been duplicated at Univ. Sheffield and Univ. Minnesota

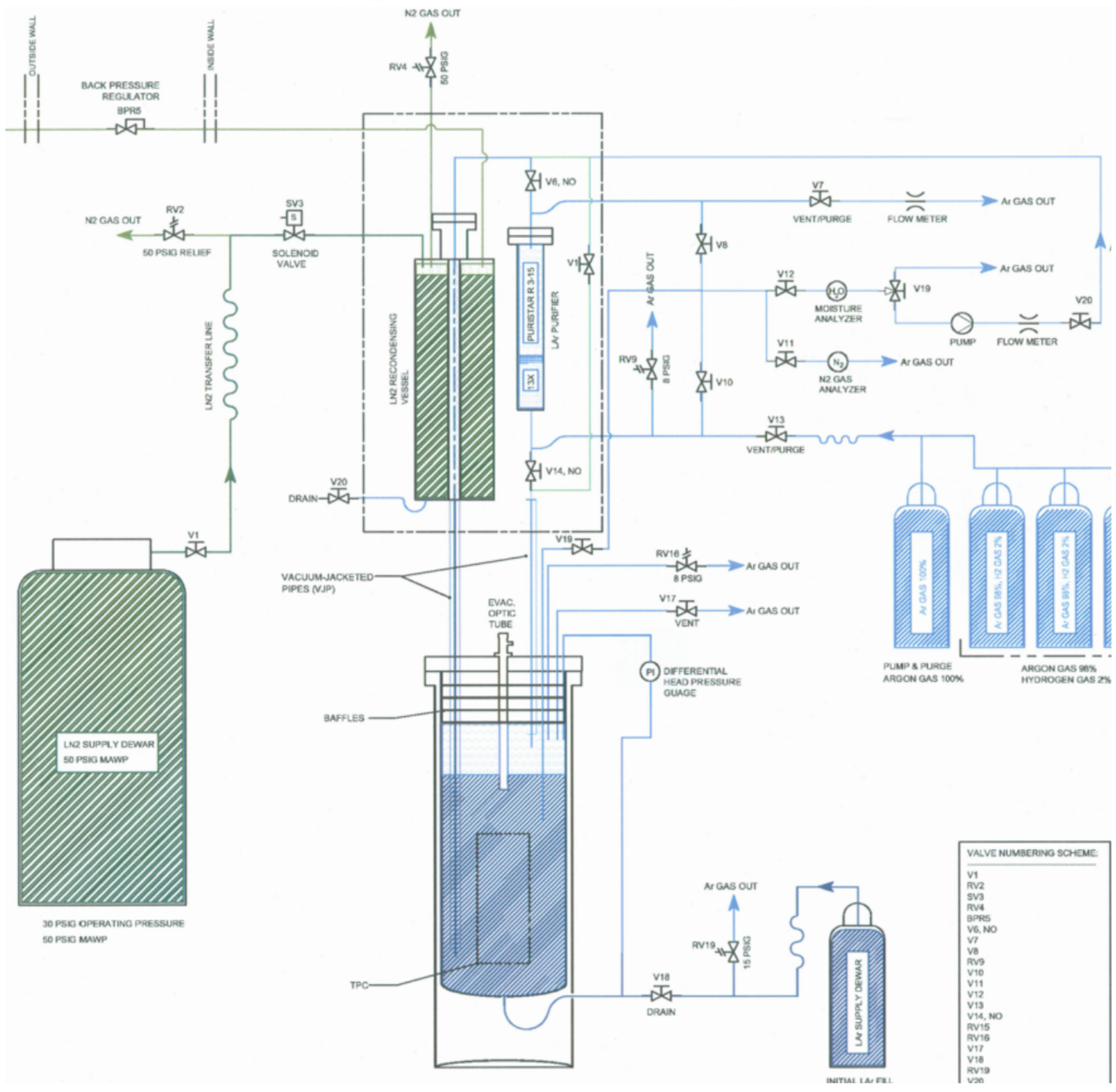

Au PhotoCahtode

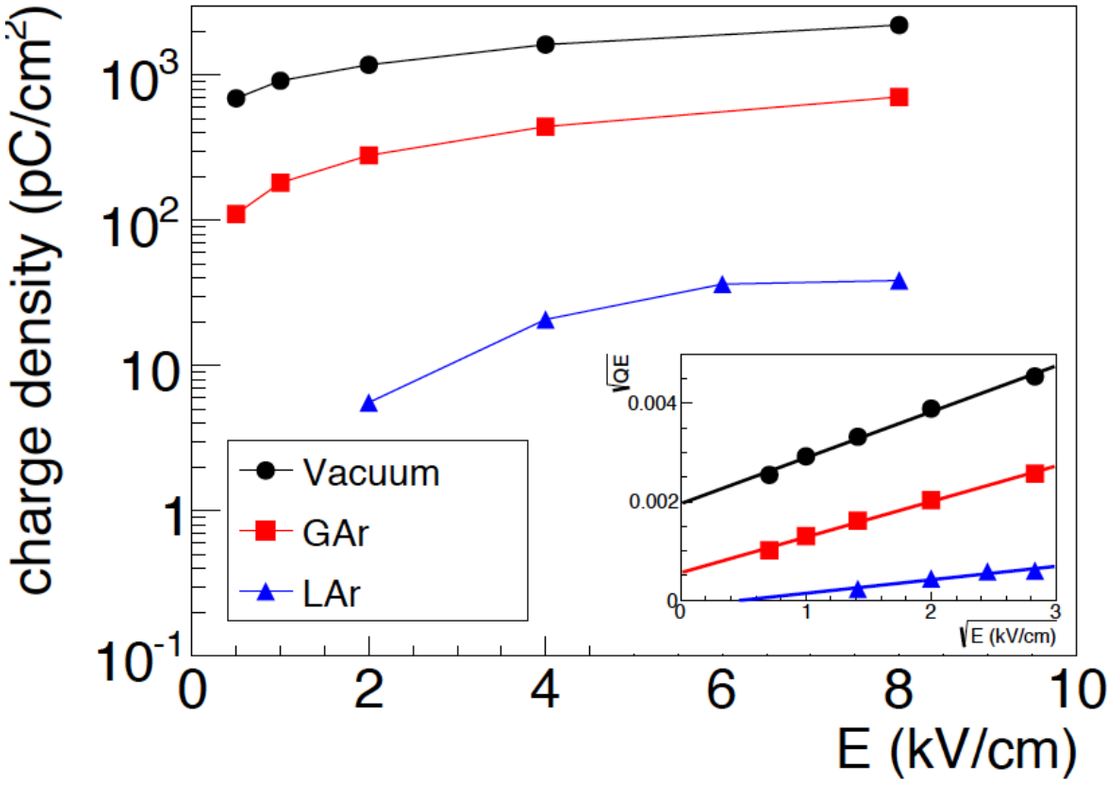

20L Test Stand: Preliminary results

- The preliminary results show good agreement with results on the 2L test stand but with better statistics and systematics

- So far we have measured drift distances of 6.5mm, 20mm, 60mm, will measure two additional drift distances (100mm and 240mm)

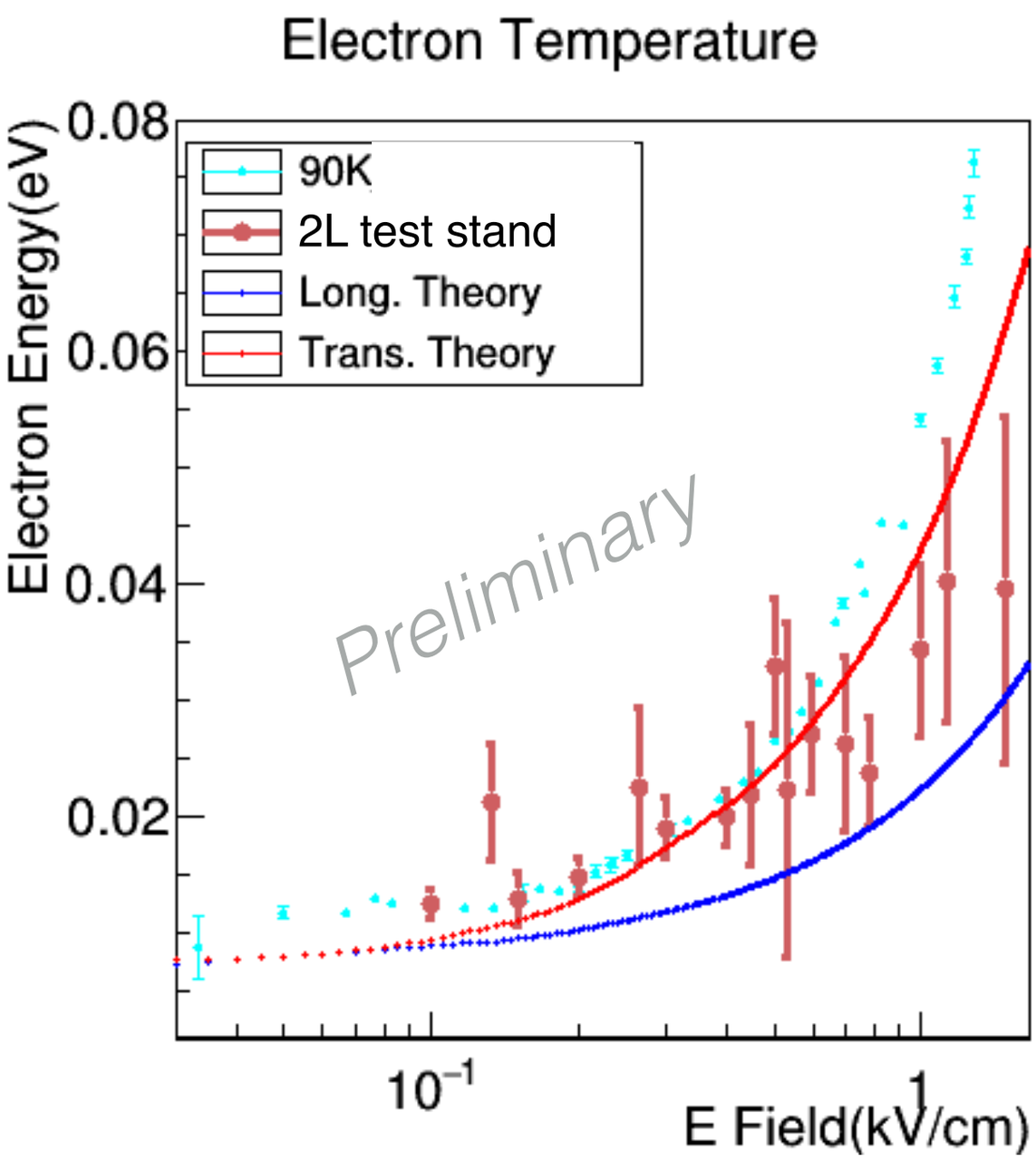

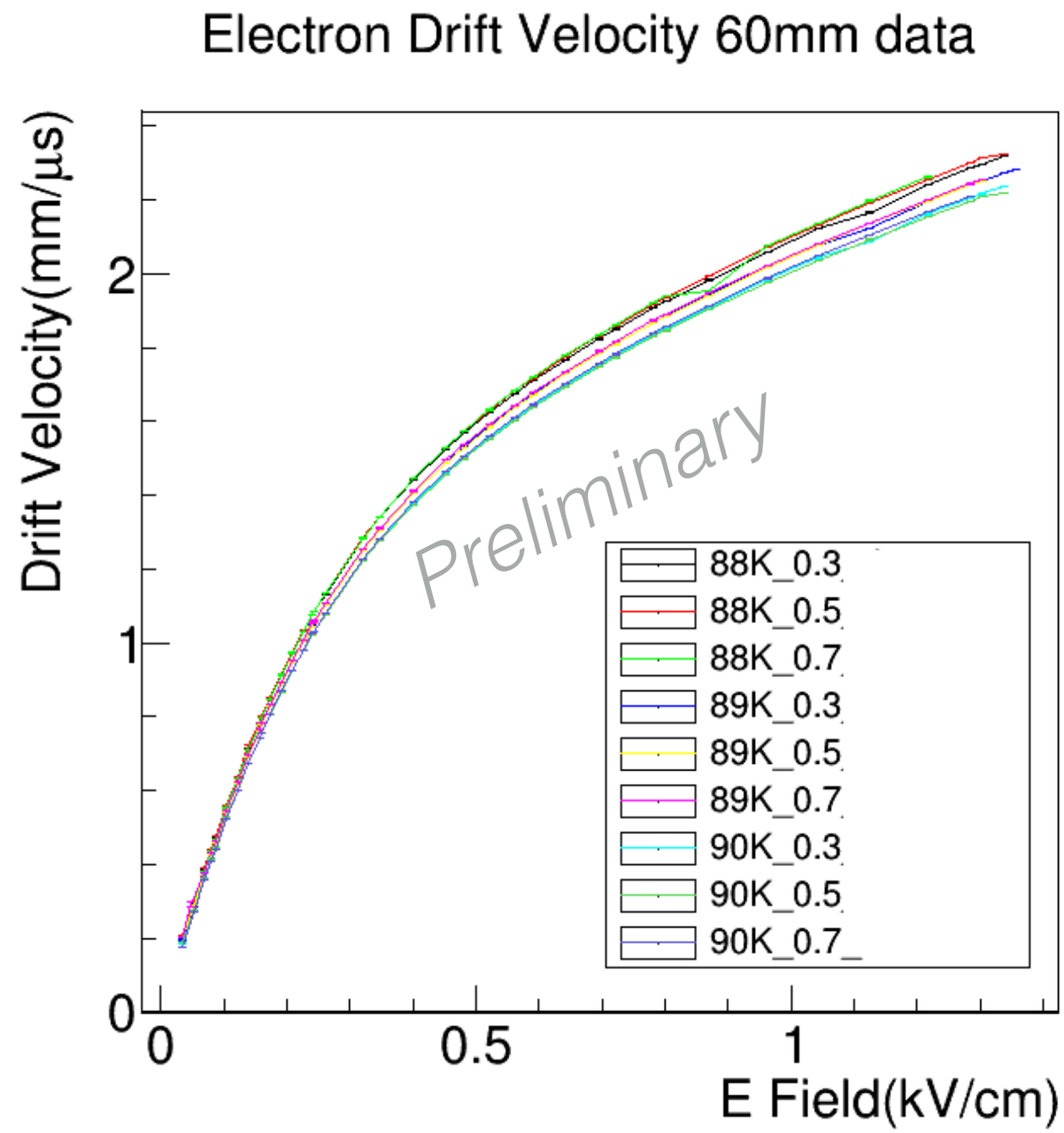

Predicting Impurity Concentrations in LAr

A Quantitative Kinetic Model of Impurity Distribution in a LArTPC

LAr cryostat/cryogenic system model

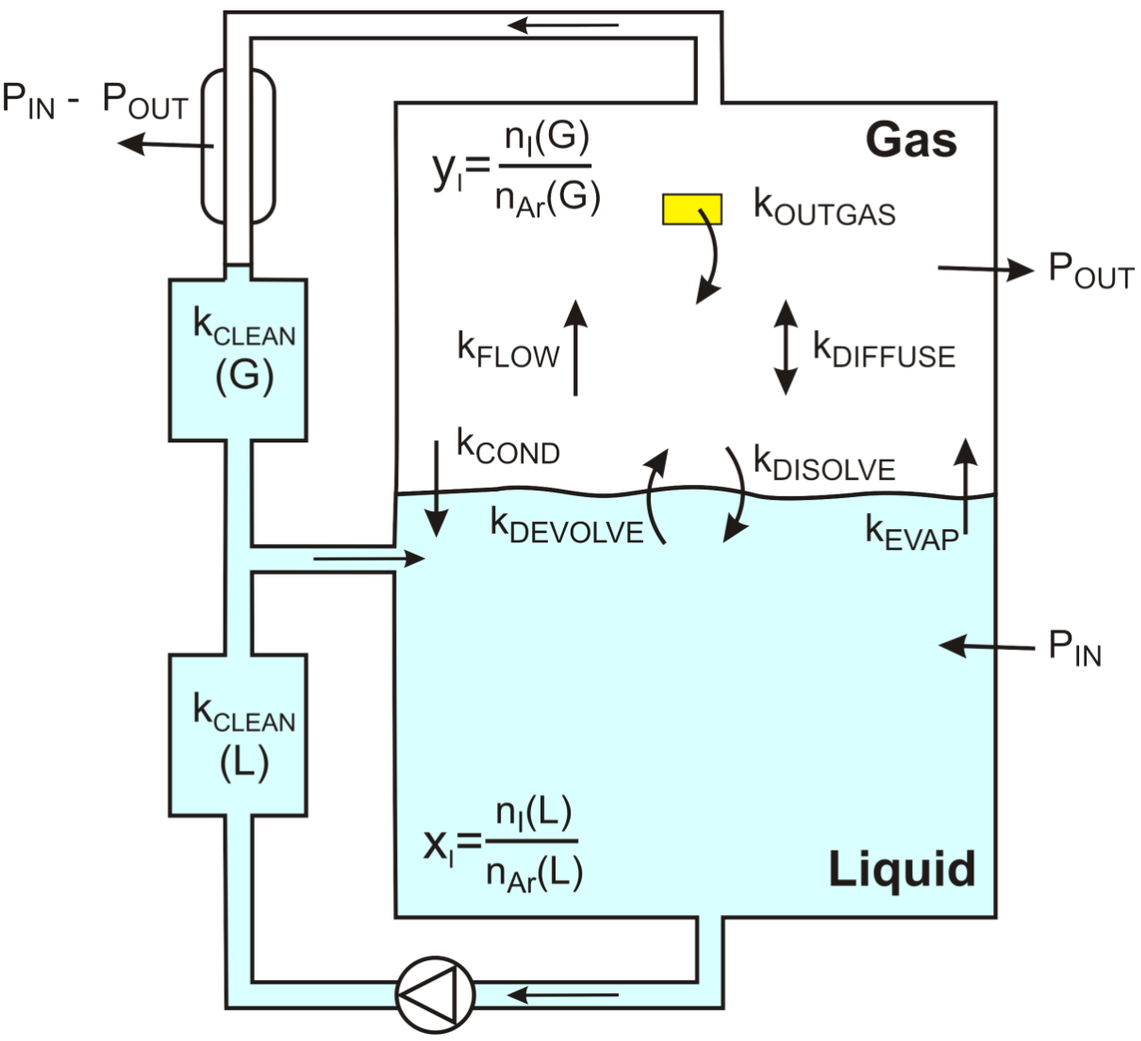

1. Impurity exchange at the gas-to-liquid interface: Henry's coefficient
2. Evaporation of the liquid
3. Condensation of the gas directly into the liquid
4. Purification of the liquid
5. Purification of the gas followed by condensation
6. Outgassing of the surfaces in contact with warm gas

Henry's Coefficient for Water

Determined from clean-up curve

- H_2O appears to have a large (but unknown) attachment rate, its Henry's constant is also unknown
- Henry's constant can be derived from clean-up curve. Such a large value —> water can be efficiently removed with gas purification

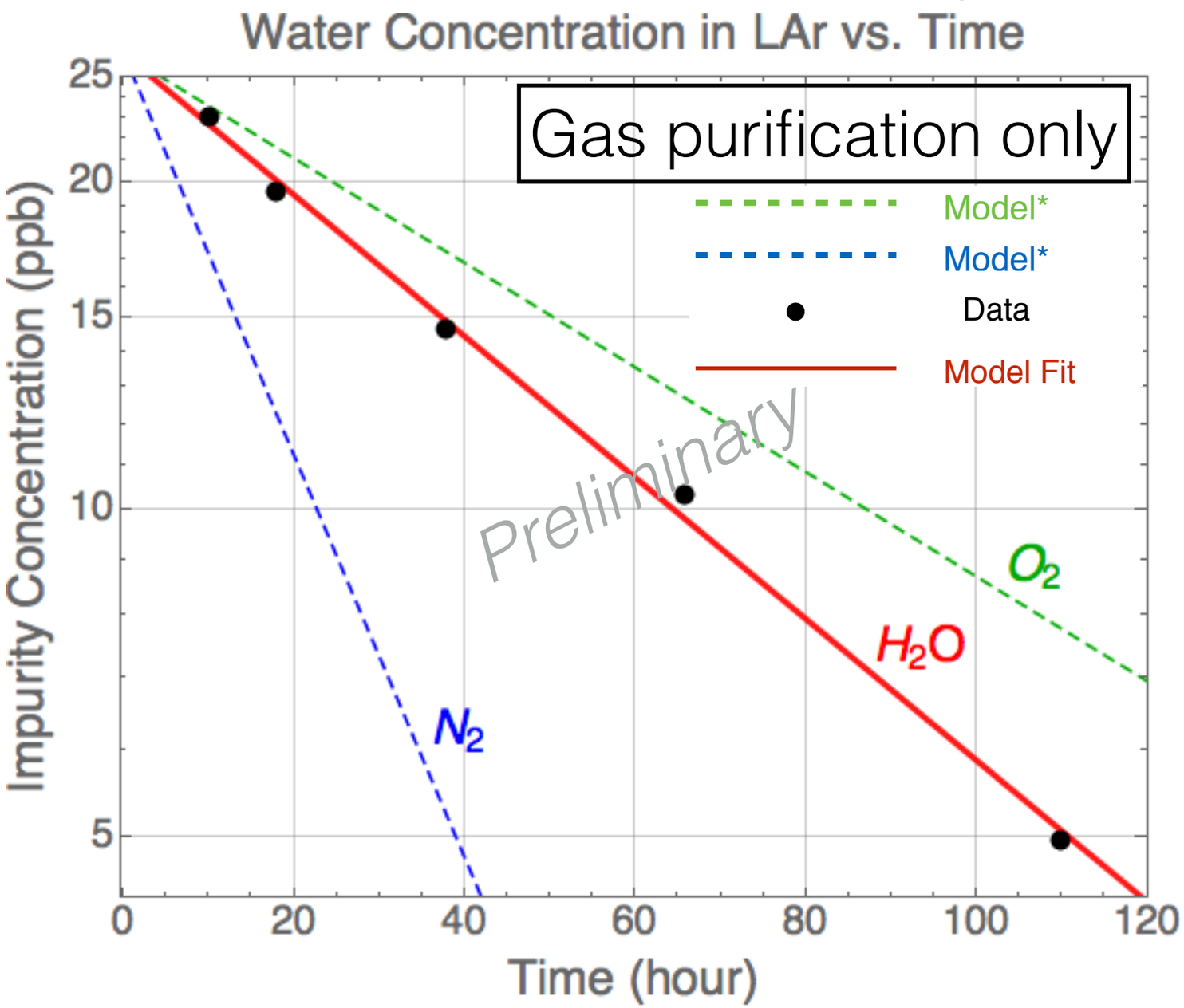

H_2O in LAr:(preliminary)

H_{xx} = 1.2±0.2

$k_{Outgas} \sim 10^{-9}$ mole m^{-2} s^{-1}

$k_{Disolve} < 8\times10^{-2}$ mole m^{-2} s^{-1}

$$H_{xx} = \frac{n_{Ar,Liquid}}{k_{Evap}\tau_{Clean}}$$

$$[H_2O]_{t\to\infty} = \frac{k_{Disolve}k_{Outgas}}{k_{Evap}{}^2 H_{xx}}$$

** With the assumption of 100% purification efficiency*

Concept of "Ideal" Cryostat and Purification System

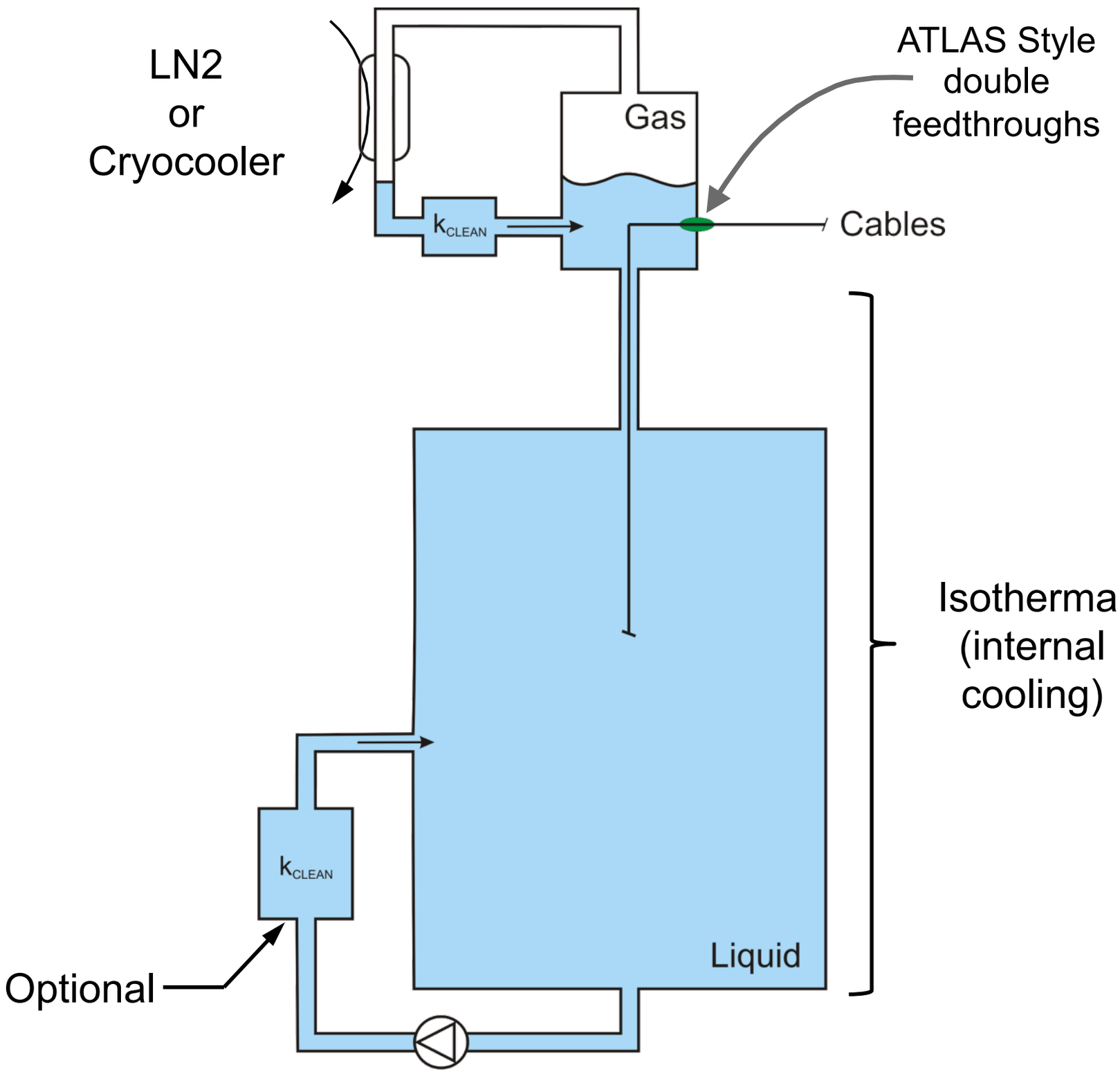

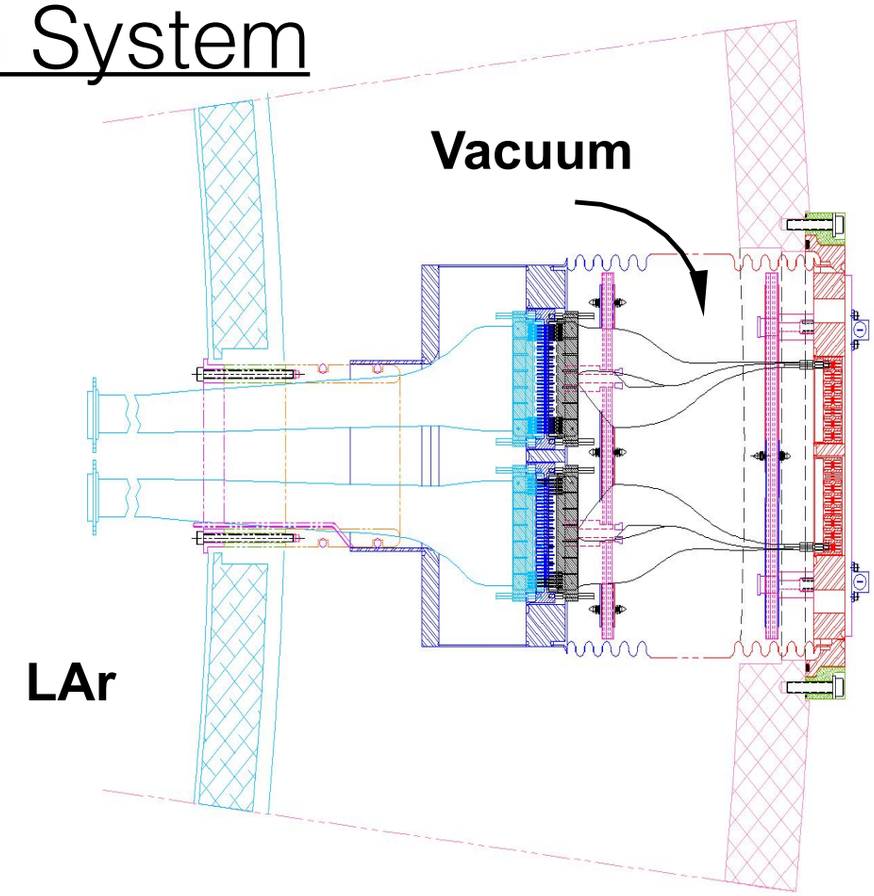

- Limit wall and cable surface area in contact with gas
- Limit gas/liquid surface area
- Limit rate of transport from ullage volume into detector volume
- Limit convective flow
- Purify the gas, before impurities enter liquid

Summary

1. It is important to understand the properties of LAr for current/future large LArTPCs

2. BNL has a R&D program dedicated to LAr properties study

3. Our current longitudinal diffusion results with the 2L test stand represent the world's best measurement in the region between 100 to 2000 V/cm

4. Improved results with 20L test stand is expected soon followed by transverse diffusion measurement

5. The Impurities model will be verified with the 20L test stand

6. 800L test stand will demonstrate the capability of gas purification for large LArTPC —> optimization of detector design

7. Additional collaborators are welcome

Thank you!

BACK UP

Transverse Diffusion Measurement

Transverse diffusion will be measured by the similar method as in **E. Shibamura, *et al*., Phys. Rev. A20 (1979)**

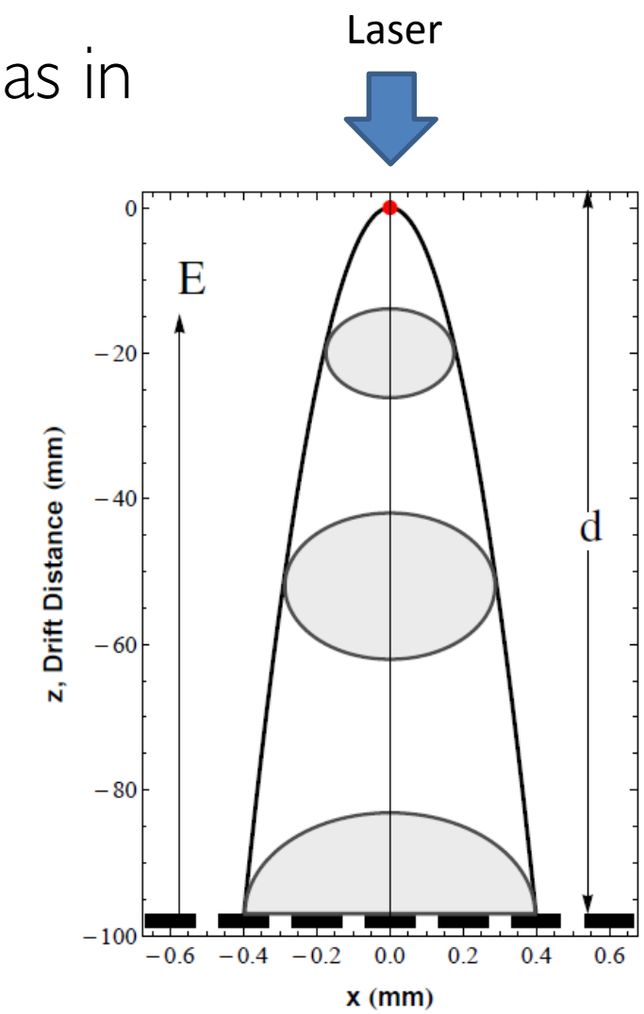

$$n = \frac{n_0}{4\pi D_T t (4\pi D_L t)^{1/2}} \exp\left[-\frac{x^2+y^2}{4\pi D_T t}\right] \exp\left[-\frac{(z+v_d t)^2}{4\pi D_L t}\right]$$

Can be written as:

$$n(r) = \frac{n_0}{\pi^{1/2} R^3} \exp\left[-\frac{r^2}{R^2}\right]$$

$$r^2 = x^2 + y^2 + (z^2 + v_d t^2) \qquad R^2 = 4 D_T t$$

The number of electrons n_k that arrive at the collector c_k can be calculated by integration over each collector.

$$R = \sqrt{4 D_T t}$$

is the transverse radius of the electron swarm

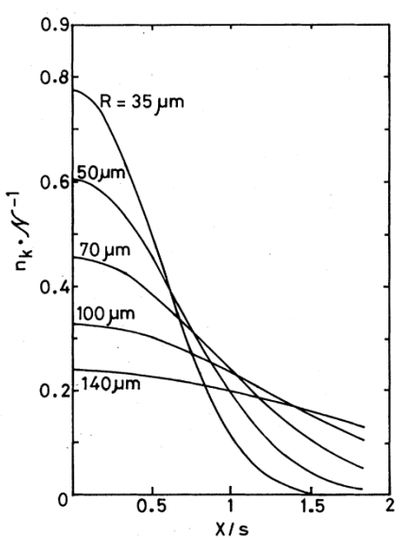

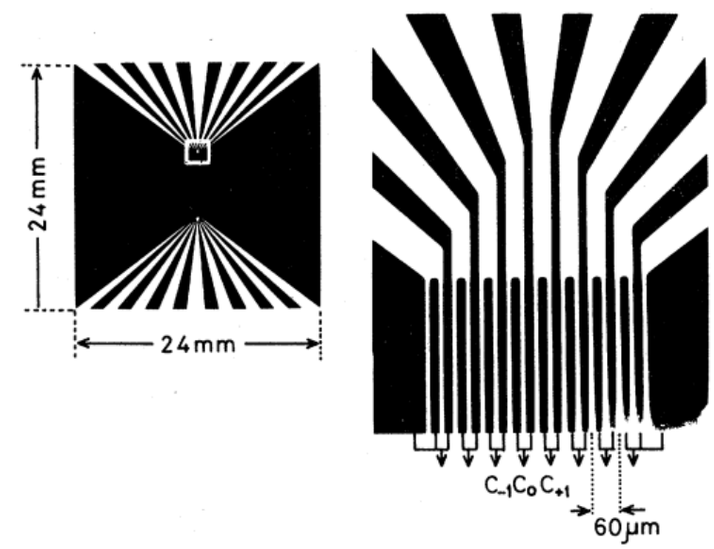

$$\frac{eD_T}{\mu} = e\frac{R^2}{4t}\frac{E}{v_d} = e\frac{R^2 V}{4d^2}$$

*Small spot size of laser is crucial for transverse diffusion measurement

Selected measured values of Henry's Coefficients

For liquids and solids dissolved in LAr

Extrapolated/interpolated to 90K

Solute	T_T K	kH,xx	solubility	Ref
N_2	63.1	3.5	1	{ID1, ID2, ID13, ID18}
O_2	54.3	0.91	1	{ID1, ID13, ID18}
He	–	4150	?	{ID15}
Ne	24.6	955	0.9	{ID15, ID16, ID19, ID20, ID21}
Kr	116.	2.2	?	{ID1}
Xe	161.	$<10^{-5}$	0.05	{ID22}
H_2	14.	780	0.25	{ID7, ID14}
D_2	18.7	610	?	{ID7}
CO	68.1	2.8	1	{ID1, ID18}
CO_2	217.	?	$2.\times10^{-6}$	{ID6, ID9}
Cycloexane	280.	?	1.6×10^{-7}	{ID26}
2,3–Dimethylbutane	144	?	0.000012	{ID5, ID29}
H_2O	273.	?	$<10^{-8}$	{ID6}
N_2O	182.	?	0.000074	{ID6}
Dimethyl ether	135.	?	0.000013	{ID6}
Diethyl ether	157.	?	4.5×10^{-6}	{ID6}
Di–n–propyl ether	158.	?	3.7×10^{-6}	{ID6}
Di–isopropyl ether	188.	?	$2.\times10^{-7}$	{ID6}

Unknown